NEW!

CVRollers (TPP) Ltd

cvrollers.com

Curtainsider Components

slideandtilt.com

Vehicle Storage Solutions

Slide & Carry

Roof Retractable Load Securing Systems



Since 1966 we have been supplying precision engineered components to the Transport and Conveyor industries.

With in-house tooling, continuous investment in the latest technology and the highest quality materials, we are one of the UK's leading bearing manufacturers elevating us to a 1st tier supply partner within the automotive and food processing industry.

With CAD/CAM and over 45 years experience in design and working with the customers we can offer a complete service.

Our standard and bespoke products include:
Conveyors
Lorry curtainsider spares
Load Restraint Systems
Slide and tilt drawers
Insert moulding
Thrust bearing cages
Pulley bearings
Purpose-made bearings
Associated assemblies incorporating our bearings

CVRollers (TPP) Ltd bearings are manufactured to suit your needs from self lubricating thermoplastic.

We use experience and high quality bearings to manufacture rollers and associated components for curtain sided trailers. Our unique patented Segment Separator design combined with stainless steel balls, maximises the strength, quality and durability of the product.

We have recently started designing and selling specialized storage components in to the Emergency Vehicle industry, concentrating in the Fire Engine market. We have set up a new company, slideandtilt.com, to make sure we give the end user the best product and service we can.

Contents Page

Telephone: +44(0)1691 670536

Contents 00

Brackets	4
Curtainsider Rollers	7
Bobbin Rollers	29
Load Securing Equipment	37
Fixings	45
Slide & Carry	49
Slide & Tilt	53
Conveyor Components	57
Injection Moulding Capabilities	70
Looking after our world	71
Notes	72













01 Curtainsider Rollers A Brief Guide to Bracket Types

Choosing the Correct Roller

There are three steps that we recommend to ensure that you are provided with the correct roller for your track.

Step 1

You first need to choose a roller that has the correct width across the wheel. This is demonstrated in *fig.1* as dimension *x* and is shown down the outside of the roller pages in this catalogue *fig.2*.

A nominal dimension* is also included in all of our part numbers for example, a roller which has a nominal width 30mm across the wheel would have the part number MB5**30**EF respectively.

Step 2

Next you need to choose a roller that will fit the height of your track. This dimension is shown in *fig.1* as dimension *y* and is shown at the top outside edge of the roller pages in this catalogue *fig.2*.

Step 3

The last step is to choose the correct bracket to fit your track and also to do the right job for your vehicle. Descriptions for each of our brackets is provided over the page.

Bracket types are also included in our part numbers. for example a roller with a 5mm thick Main Bar bracket would have the part no **MB5**30EF Respectively.

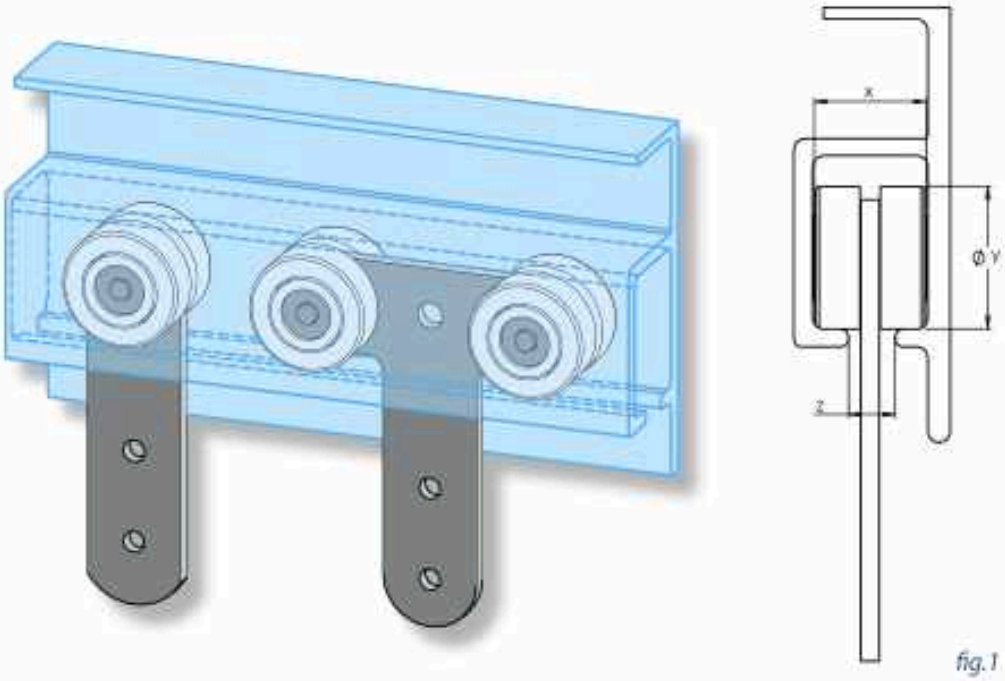

fig.1



fig.2

*Precise size available on request

Contents Page

Telephone: +44(0)1691 670536

All parts are manufactured to a tolerance of +/- 0.2mm. Rollers must be checked by track for suitability.

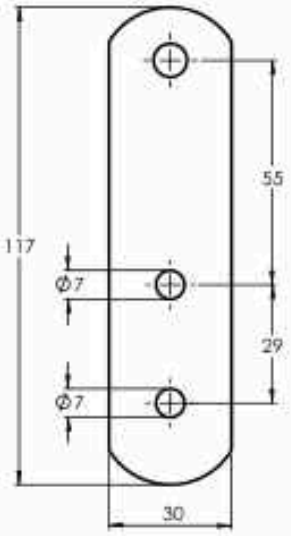



MB

Main Bar

Main Bar Brackets are the most common type of bracket and come in either 3mm thickness or 5mm thickness. They house two wheels allowing the roller to tilt in the track and are designed to fit our back-plates.

Zinc Plated

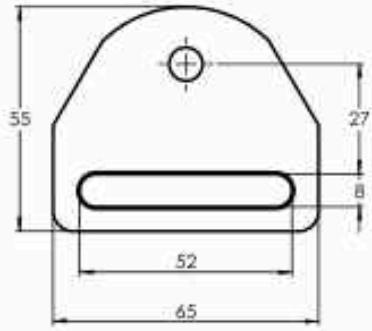



NH

Net Hanger

Net Hanger Brackets are manufactured with a slot which is designed to fit webbing and house two wheels allowing the roller to tilt in the track towards the front and rear of the vehicle. They come in 3mm or 5mm thickness.

Zinc Plated

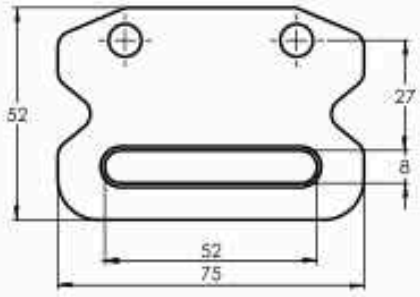



FF

Frog Face

Frog Face Brackets (also known as Rocket Rollers) are manufactured like net hanger brackets with a slot which is designed to fit webbing and made to house four wheels instead of two locking the roller in a horizontal position. They come in a 5mm standard thickness.

Zinc Plated

Contents Page

All parts are manufactured to a tolerance of + or - 0.2mm
Rollers must be checked in tracks for suitability

T

Tandem

Tandem Brackets house four or six wheels locking the roller in a horizontal position and are made to fit our backplates. They come in a standard 5mm thickness.

Zinc Plated



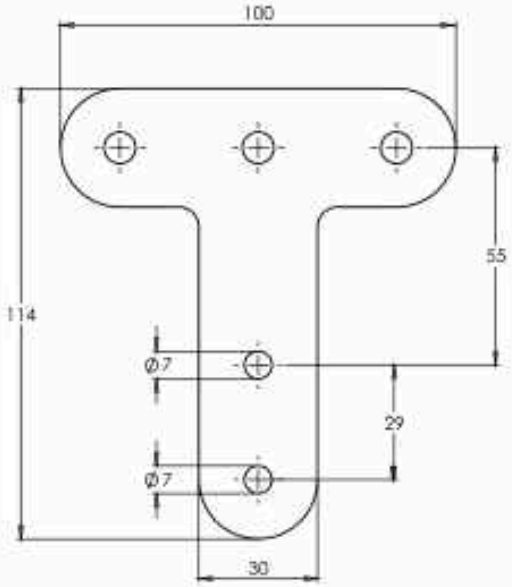

HTP

Hinged Tandem

Hinged Tandem Brackets house four wheels which lock the roller into a horizontal position and are hinged to allow the bracket to tilt towards and away from the vehicle. They come in a standard 5mm thickness and are made to fit our backplates.

Zinc Plated

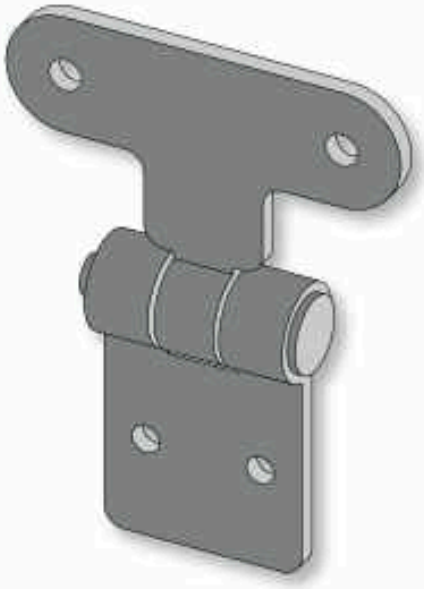

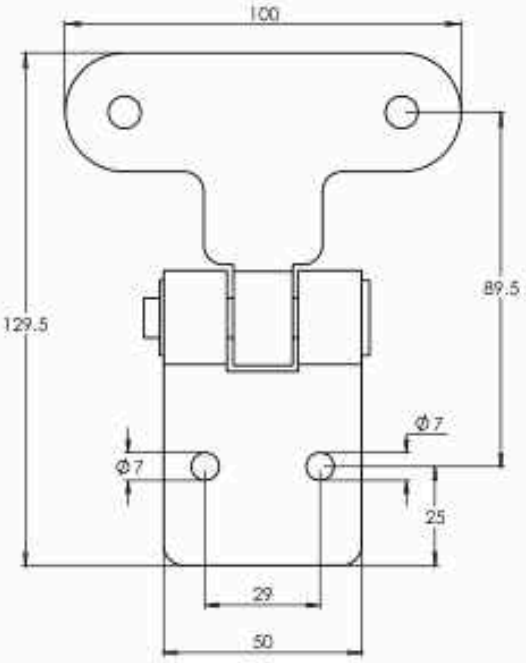

Telephone: +44(0)1691 670536

All parts are manufactured to a tolerance of +/- 0.2mm. Rollers must be checked by hand for suitability.

Curtainsider Rollers

Eco Flat 02 8
36.7mm DIA. 28, 30 & 32.9mm Across Wheel

Wide Flat 03 9
36.8mm DIA. 36.6 & 39.6mm Across Wheel

Natural Wide Flat 04 10
35mm DIA. 35 & 36.7mm Across Wheel

Blue Small 05 11
33mm DIA. 23.4, 26.5, 29.4 & 32.4mm Across Wheel

Blue Bevel 06 12
35.5mm DIA. 30mm Across Wheel

Grey Bevel 07 13
35.2mm DIA. 30mm Across Wheel

CW Wheel 08 14
39.7mm DIA. 30mm Across Wheel

Natural Small 09 15
30.8mm DIA. 27.7 & 31.2mm Across Wheel

Natural Continental 10 16
27.5mm DIA. 25.6 & 27.7mm Across Wheel

Natural French 11 17
30.6mm DIA. 24.4mm Across Wheel

Light Blue 12 17
30.6mm DIA. 24.3mm Across Wheel

Orange Small 13 18
31.3mm DIA. 28.9mm Across Wheel

Fraehauf Bevel 14 18
43mm DIA. 33.5mm Across Wheel

YDB Wheel 15 19
35.2mm DIA. 31.9mm Across Wheel

Solid Eco Flat 16 20
37.5mm DIA. 29.5mm Across Wheel

Steel Wheel 17 21
38mm DIA. 29.6mm Across Wheel

Turned Steel Wheel 18 22
28mm DIA. 23.2 & 27.5mm Across Wheel

Blue Flat Tyre 19 23
36.7mm DIA. 30.5mm Across Wheel

Blue Moulded Tyre 20 24
31.9mm DIA. 28.9mm Across Wheel

Natural Flat Tyre 21 25
33.8mm DIA. 31mm Across Wheel

Regular Bevel Tyre 22 26
35.6mm DIA. 29mm Across Wheel

Natural Small Tyre 23 27
31mm DIA. 31.3mm Across Wheel

Contents Page

02 Eco Flat Rollers

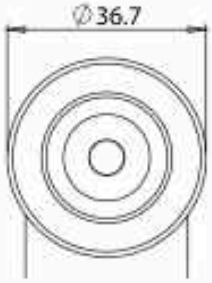



1.

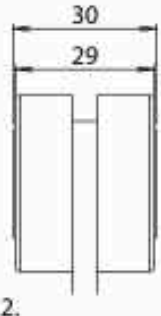

2.

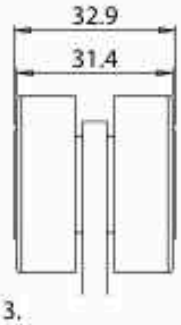

3.

Bearings Contain Stainless Steel Balls

UTS: 1800kg



1. NH328EF
2. NH530EF
3. NH533EF

Box Qty: 50
Box Weight: 7.3kg

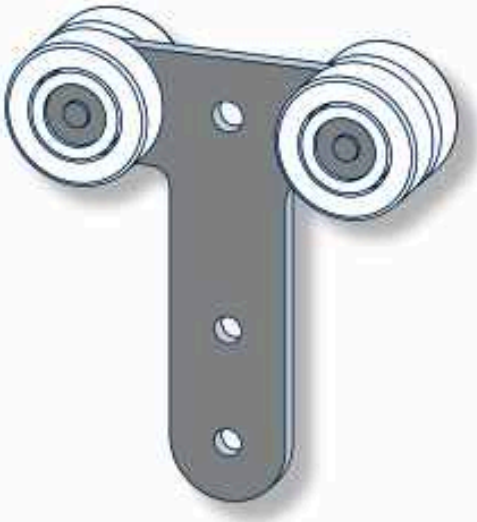

2. T530EF
3. T533EF

Box Qty: 25
Box Weight: 7.1kg



1. MB328EF
2. MB530EF
3. MB533EF

Box Qty: 50
Box Weight: 8.7kg

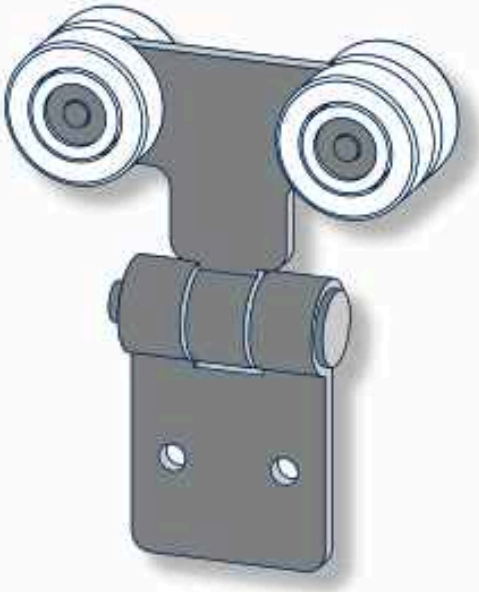

2. HTP530EF
3. HTP533EF

Box Qty: 25
Box Weight: 11kg



2. FF530EF
3. FF533EF

Box Qty: 50
Box Weight: 12.1kg

Contents Page | Curtain Rollers

Telephone: +44(0)1691 670536

All parts are manufactured to a tolerance of +/- 0.2mm. Rollers must be checked by user for suitability.

Rollers Wide Flat 03



1. NH536WF
2. NH540WF
Box Qty: 50
Box Weight: 7.6kg

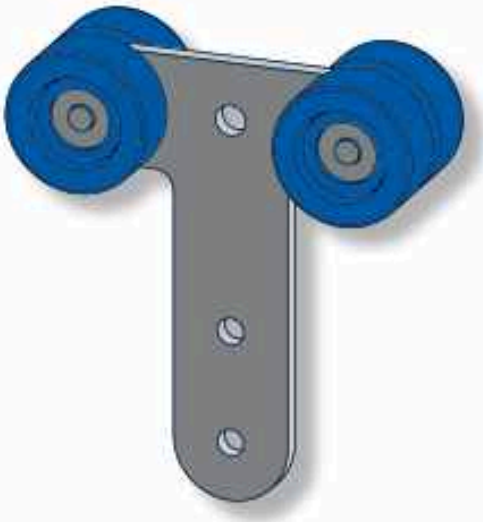

1. T536WF
2. T540WF
Box Qty: 25
Box Weight: 7.4kg

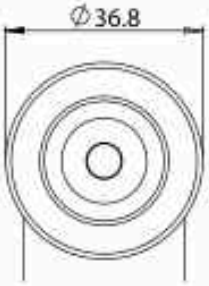

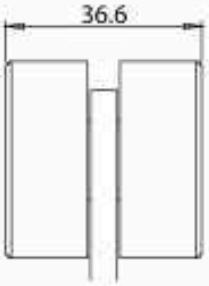

1.

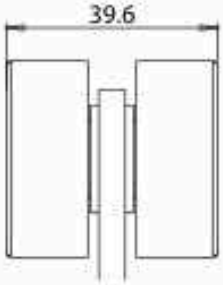

2.

Bearings Contain Stainless Steel Balls

UTS: 1800kg



1. MB536WF
2. MB540WF
Box Qty: 50
Box Weight: 9kg

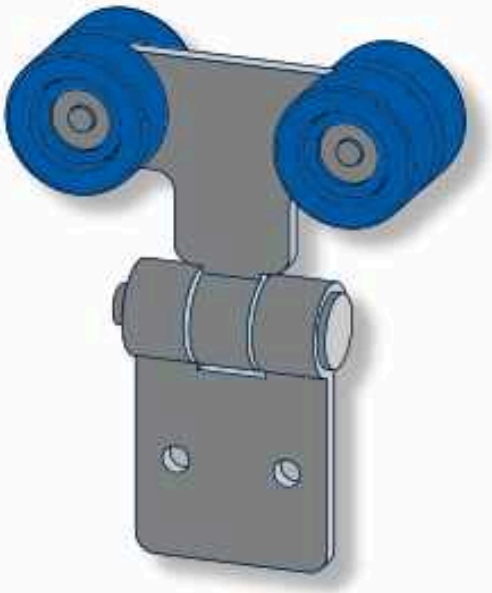

1. HTP536WF
2. HTP540WF
Box Qty: 25
Box Weight: 11.3kg



1. FF536WF
2. FF540WF
Box Qty: 50
Box Weight: 11kg

All parts are manufactured to a tolerance of +/- 0.2mm
Rollers must be checked in tracks for suitability

Telephone: +44(0)1691 670536

04 Natural Wide Flat Rollers

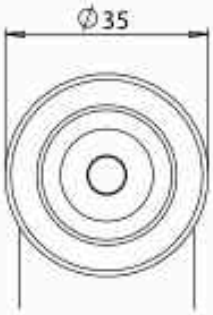

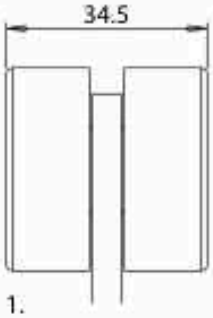

1.

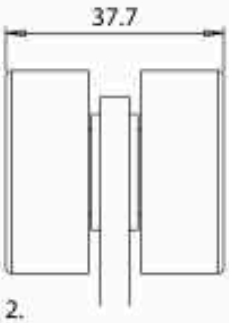

2.

Bearings Contain
Stainless Steel Balls

UTS: 1800kg



1. NH535NWF
2. NH538NWF
Box Qty: 50
Box Weight: 7.6kg

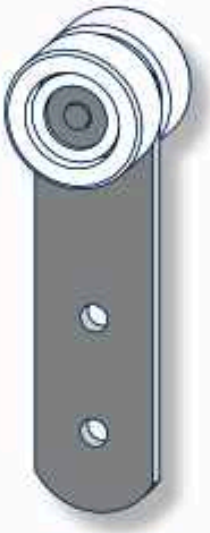

1. MB535NWF
2. MB538NWF
Box Qty: 50
Box Weight: 9kg



1. FF535NWF
2. FF538NWF
Box Qty: 50
Box Weight: 10.4kg



1. T535NWF
2. T538NWF
Box Qty: 25
Box Weight: 7kg

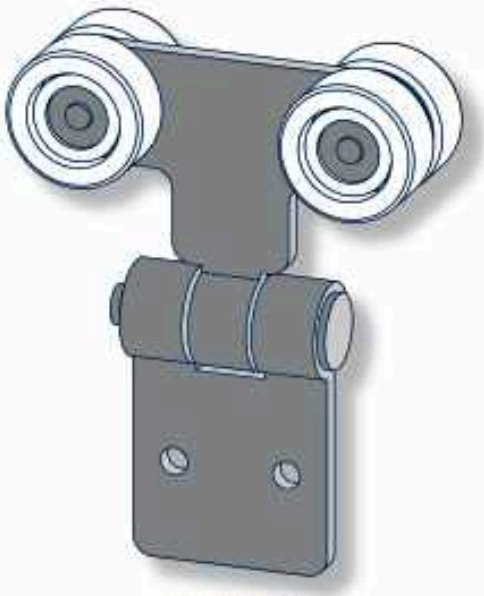

1. HTP535NWF
2. HTP538NWF
Box Qty: 25
Box Weight: 11kg

Contents Page Curtain Rollers

Telephone: +44(0)1691 670536

All parts are manufactured to a tolerance of +1 or -0.2mm. Rollers must be checked to match for suitability.

Rollers Blue Small 05

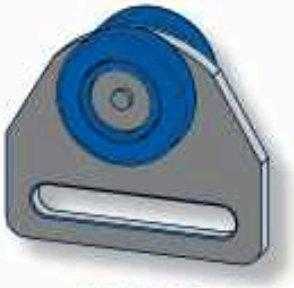

1. NH524S
2. NH527S
3. NH530S
4. NH533S

Box Qty: 50
Box Weight: 7.4kg



1. T524S
2. T527S
3. T530S
4. T533S

Box Qty: 25
Box Weight: 6.6kg



1. MB524S
2. MB527S
3. MB530S
4. MB533S

Box Qty: 50
Box Weight: 8.4kg

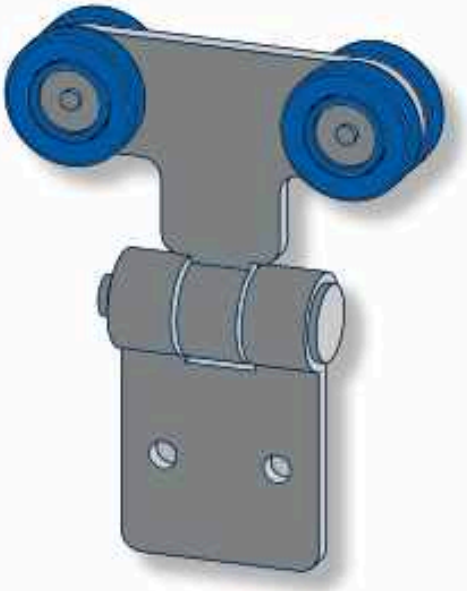

1. HTP524S
2. HTP527S
3. HTP530S
4. HTP533S

Box Qty: 25
Box Weight: 10.5kg

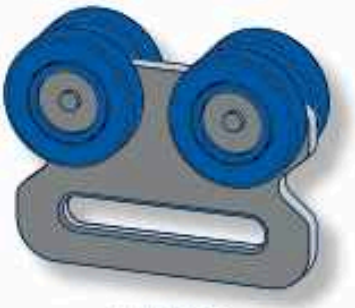

1. FF524S
2. FF527S
3. FF530S
4. FF533S

Box Qty: 50
Box Weight: 12.1kg

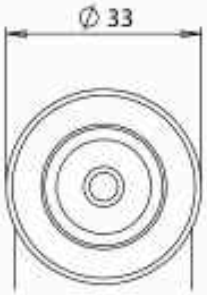

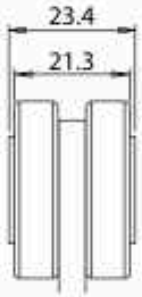

1.



2.

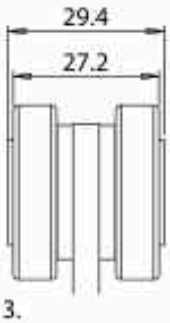

3.

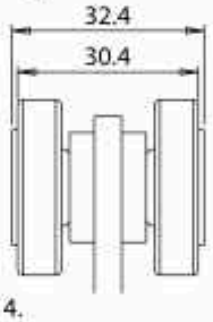

4.

Bearings Contain Stainless Steel Balls

UTS: 1800kg

All parts are manufactured to a tolerance of +/- 0.2mm
Rollers must be checked in tracks for suitability

06 Blue Bevel Rollers

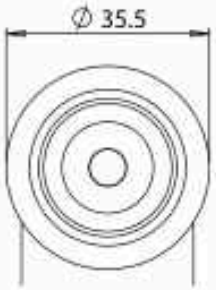

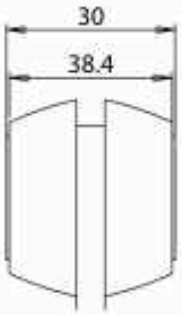

Bearings Contain Stainless Steel Balls

UTS: 1800kg



NH530BB
Box Qty: 50
Box Weight: 7.1kg



T530BB
Box Qty: 25
Box Weight: 6.7kg



MB530BB
Box Qty: 50
Box Weight: 8.4kg

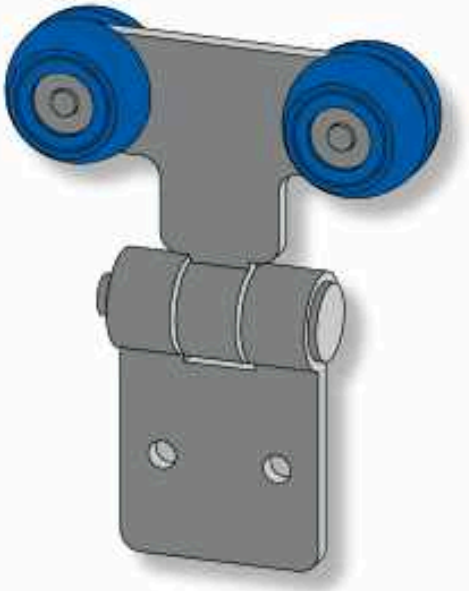

HTP530BB
Box Qty: 25
Box Weight: 10.6kg



FF530BB
Box Qty: 50
Box Weight: 9.7kg

Contents Page | Curtain Rollers

Telephone: +44(0)1691 670536

All parts are manufactured to a tolerance of +/- 0.2mm. Rollers must be checked by user for suitability.

Rollers Grey Bevel 07



NH530GB
Box Qty: 100
Box Weight: 14kg



T530GB
Box Qty: 25
Box Weight: 6.8kg

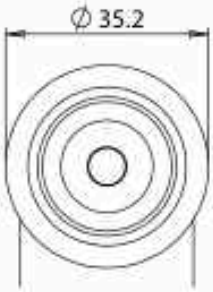

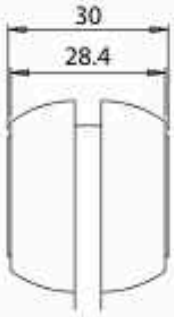

Bearings Contain Stainless Steel Balls

UTS: 1800kg



MB530GB
Box Qty: 50
Box Weight: 8kg

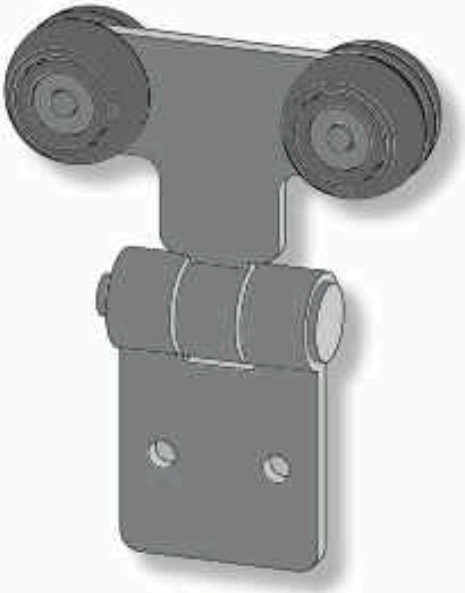

HTP530GB
Box Qty: 25
Box Weight: 11kg



FF530GB
Box Qty: 50
Box Weight: 9.8kg

All parts are manufactured to a tolerance of + or - 0.2mm
Rollers must be checked in tracks for suitability

08 CW Wheel Rollers

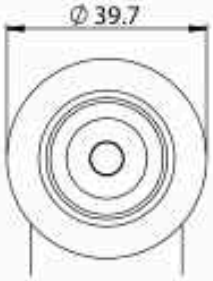

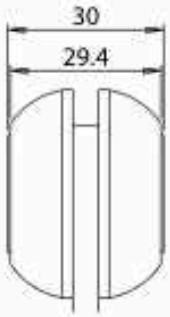

Bearings Contain Stainless Steel Balls

UTS: 1800kg



NH530CW
Box Qty: 50
Box Weight: 7kg



T530CW
Box Qty: 25
Box Weight: 7kg



MB530CW
Box Qty: 50
Box Weight: 8.8kg

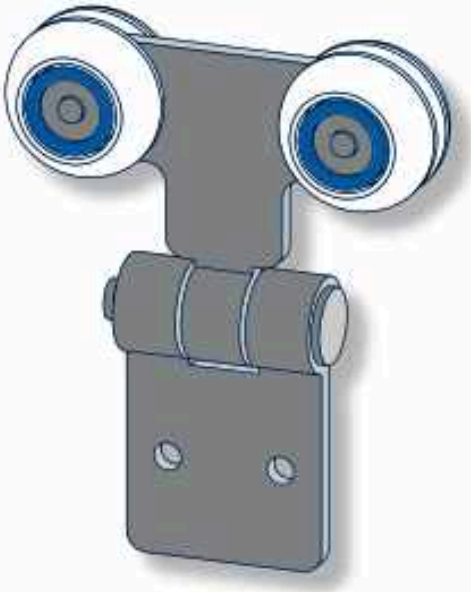

HTP530CW
Box Qty: 25
Box Weight: 10.9kg



FF530CW
Box Qty: 50
Box Weight: 7.5kg

Contents Page | Curtain Rollers

Telephone: +44(0)1691 670536

All parts are manufactured to a tolerance of +/- 0.2mm. Rollers must be checked by user for suitability.

Rollers Natural Small 09



1. NH527NS
2. NH531NS
Box Qty: 100
Box Weight: 15.3kg

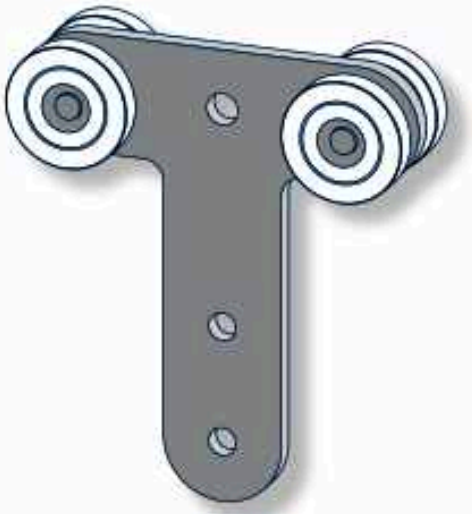

1. T527NS
2. T531NS
Box Qty: 25
Box Weight: 7kg



1. MB527NS
2. MB531NS
Box Qty: 50
Box Weight: 8.3kg

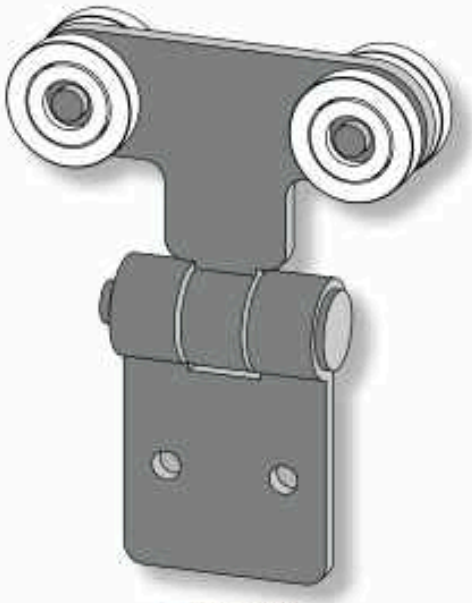

1. HTP527NS
2. HTP531NS
Box Qty: 25
Box Weight: 10.9kg



1. FF527NS
2. FF531NS
Box Qty: 50
Box Weight: 8kg



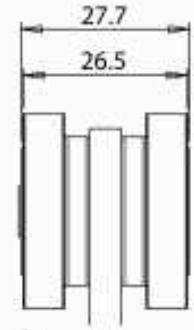

1.

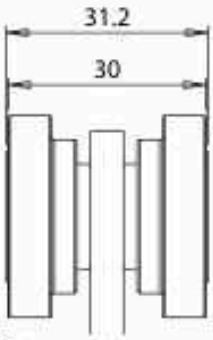

2.

Bearings Contain Stainless Steel Balls

UTS: 1800kg

All parts are manufactured to a tolerance of +/- 0.2mm
Rollers must be checked in tracks for suitability

10 Natural Continental Rollers

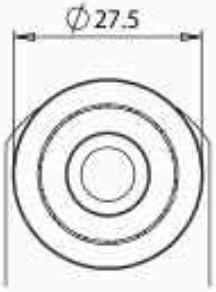

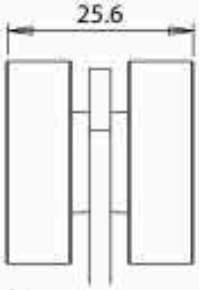

1.

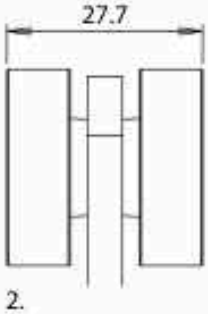

2.

Bearings Contain
Stainless Steel Balls

UTS: 1800kg



1. NH326NC
2. NH528NC
Box Qty: 50
Box Weight: 7kg

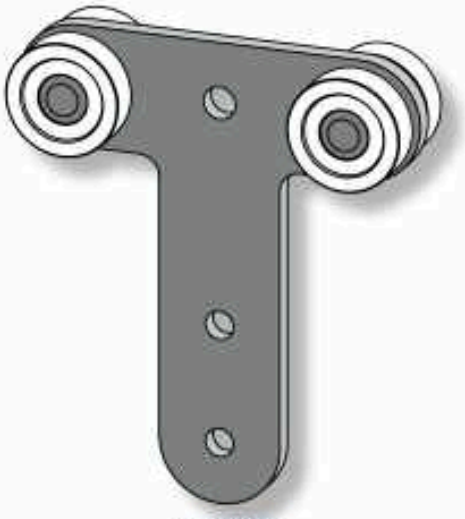

2. T528NC
Box Qty: 25
Box Weight: 6.1kg



1. MB326NC
2. MB528NC
Box Qty: 50
Box Weight: 7kg

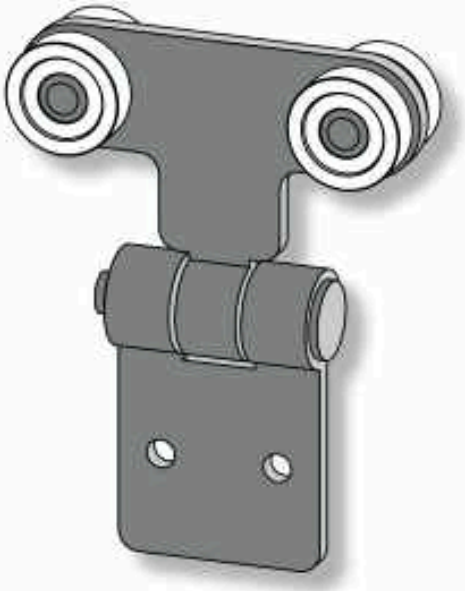

2. HTP528NC
Box Qty: 25
Box Weight: 10.1kg



2. FF528NC
Box Qty: 50
Box Weight: 8.7kg

Contents Page Curtain Rollers

Telephone: +44(0)1691 670536

All parts are manufactured to a tolerance of +1 or -0.2mm. Rollers must be checked to match for suitability.

Rollers Natural French 11



NH324NF
Box Qty: 100
Box Weight: 9kg



MB324NF
Box Qty: 100
Box Weight: 10.2kg

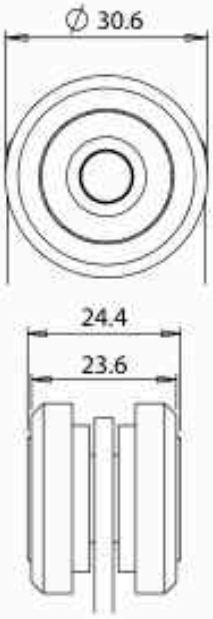

Bearings Contain Stainless Steel Balls

UTS: 1800kg

Rollers Light Blue 12



NH324LB
Box Qty: 100
Box Weight: 9kg



MB324LB
Box Qty: 100
Box Weight: 10.2kg

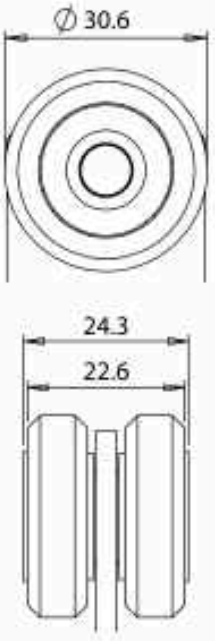

Bearings Contain Stainless Steel Balls

UTS: 1800kg

All parts are manufactured to a tolerance of + or - 0.2mm
Rollers must be checked in tracks for suitability

13 Orange Small Rollers

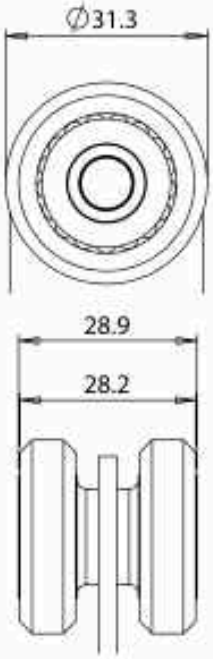

Bearings Contain Stainless Steel Balls

UTS: 1800kg



NH329OS
Box Qty: 100
Box Weight: 9kg



MB329OS
Box Qty: 100
Box Weight: 10.3kg

14 Fraehauf Bevel Rollers

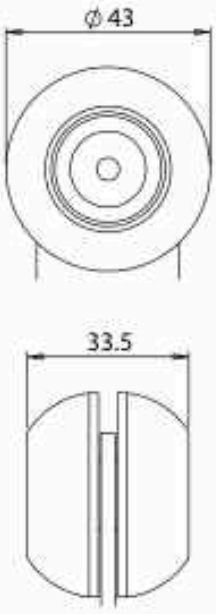

Bearings Contain Stainless Steel Balls

UTS: 1800kg



NH334FB
Box Qty: 50
Box Weight: 6kg



MB334FB
Box Qty: 50
Box Weight: 7kg

Contents Page Curtain Rollers

Telephone: +44(0)1691 670536

All parts are manufactured to a tolerance of +1 or -0.2mm. Rollers must be checked to match for suitability.

Rollers YDB Wheel 15



NH532YDB
Box Qty: 50
Box Weight: 7.6kg



T532YDB
Box Qty: 25
Box Weight: 7kg

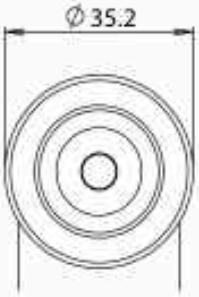

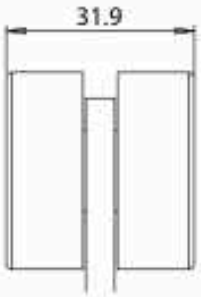

Bearings Contain Stainless Steel Balls

UTS: 1800kg



MB532YDB
Box Qty: 50
Box Weight: 9kg

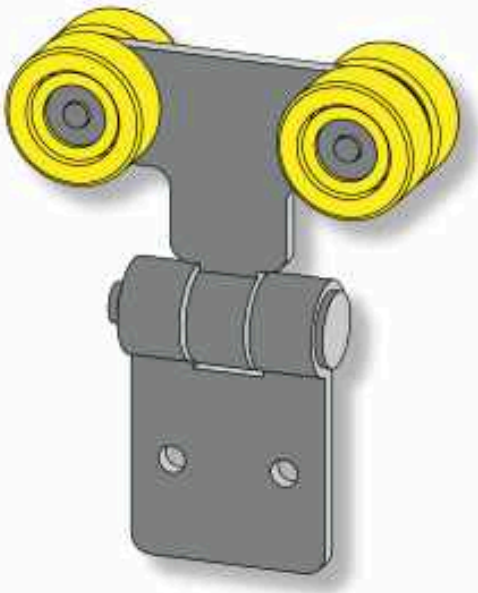

HTP532YDB
Box Qty: 25
Box Weight: 10.9kg



FF532YDB
Box Qty: 50
Box Weight: 10.4kg

All parts are manufactured to a tolerance of +/- 0.2mm
Rollers must be checked in tracks for suitability

16 Solid Eco Flat Rollers

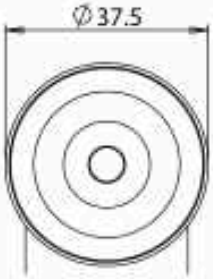

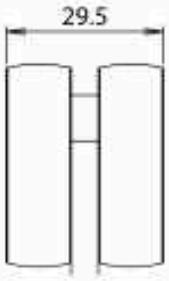

Solid Wheel
No balls

UTS: 1800kg



NH530SEF
Box Qty: 50
Box Weight: 9.8kg

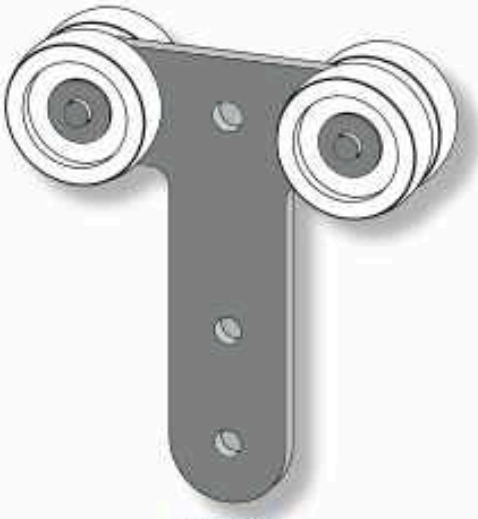

T530SEF
Box Qty: 25
Box Weight: 7.3kg



MB530SEF
Box Qty: 50
Box Weight: 8.7kg

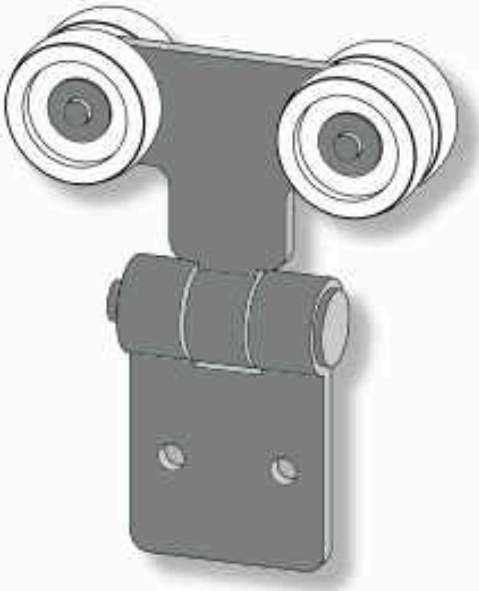

HTP530SEF
Box Qty: 25
Box Weight: 11.2kg

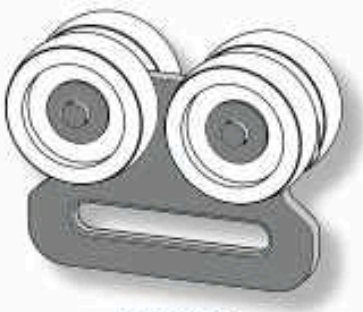

FF530SEF
Box Qty: 25
Box Weight: 10.9kg

Contents Page | Curtain Rollers

Telephone: +44(0)1691 670536

All parts are manufactured to a tolerance of +1 or -0.2mm. Rollers must be checked to match for suitability.

Steel Wheel Rollers 17



NH528SW
Box Qty: 50
Box Weight: 9.4kg

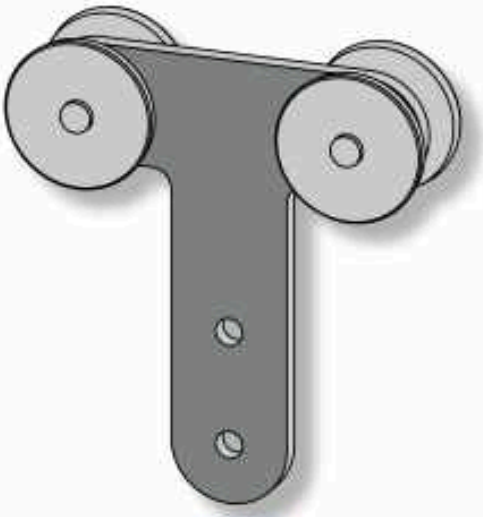

T528SW
Box Qty: 25
Box Weight: 9.1kg

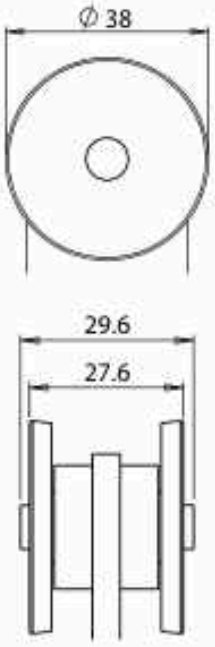

No Balls

UTS: 1800kg



MB528SW
Box Qty: 50
Box Weight: 10.6kg

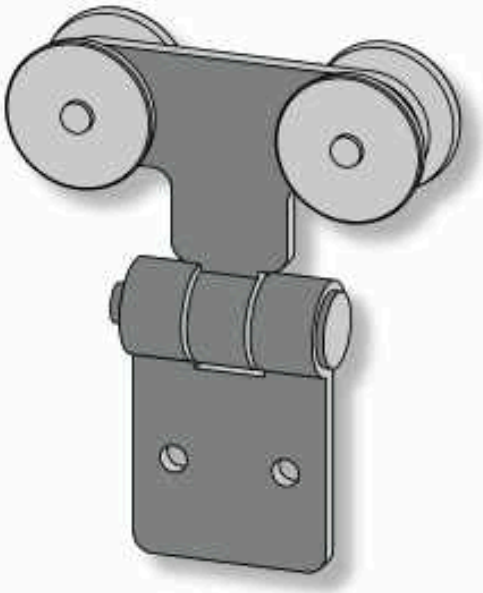

HTP528SW
Box Qty: 25
Box Weight: 13.3kg

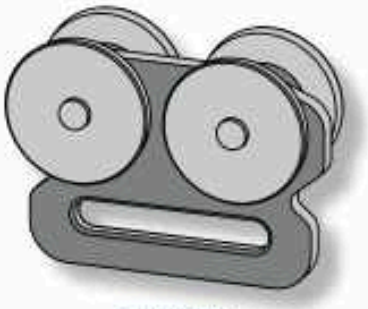

FF528SW
Box Qty: 50
Box Weight: 15.7kg

All parts are manufactured to a tolerance of + or - 0.2mm
Rollers must be checked in tracks for suitability

18 Turned Steel Wheel Rollers



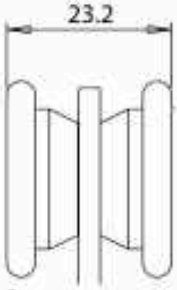

1.

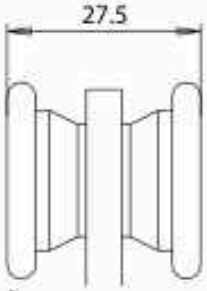

2.

No Balls

UTS: 1800kg



1. NH324TSW3
2. NH529TSW3

Box Qty: 50

Box Weight: 7.8kg

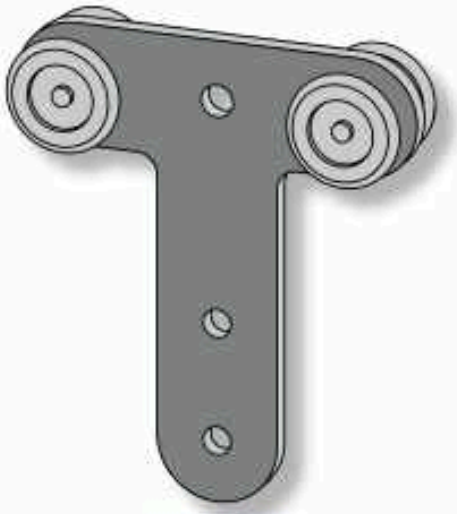

2. T529TSW3

Box Qty: 25

Box Weight: 7.5kg



1. MB324TSW3
2. MB529TSW3

Box Qty: 50

Box Weight: 9.4kg

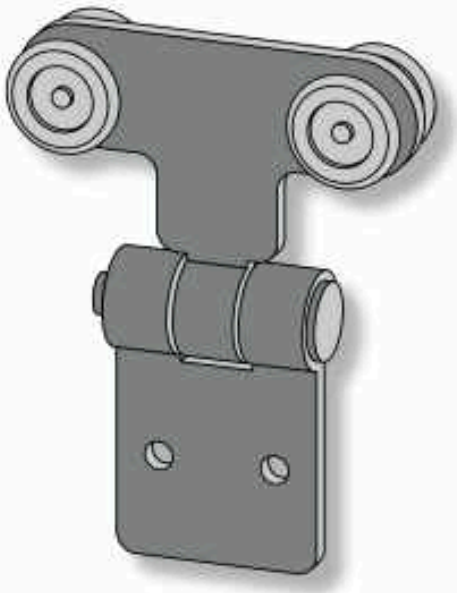

2. HTP529TSW3

Box Qty: 25

Box Weight: 12kg



2. FF529TSW3

Box Qty: 50

Box Weight: 11.3kg

Contents Page Curtain Rollers

Telephone: +44(0)1691 670536

All parts are manufactured to a tolerance of +/- 0.2mm. Rollers must be checked to match for suitability.

Rollers Blue Flat Tyre 19



NH530BFT
Box Qty: 50
Box Weight: 8kg



T530BFT
Box Qty: 25
Box Weight: 7.5kg

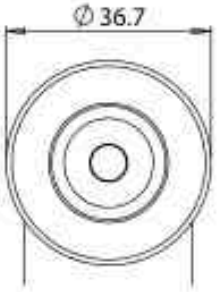

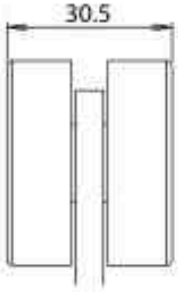

All rollers contain Carbon Chrome Precision Bearings

UTS: 1800kg



MB530BFT
Box Qty: 50
Box Weight: 8kg

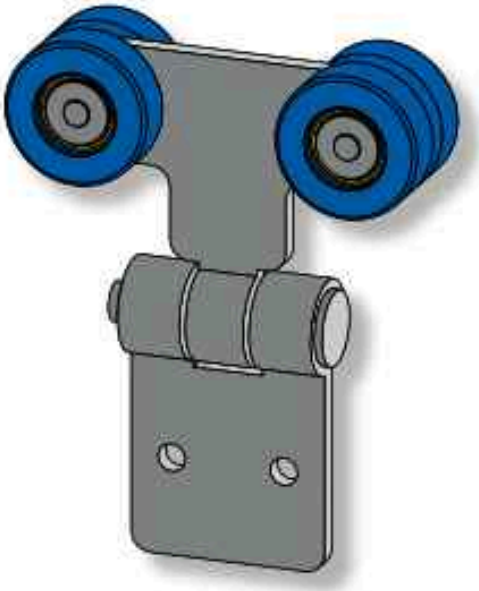

HTP530BFT
Box Qty: 25
Box Weight: 11.4kg



FF530BFT
Box Qty: 50
Box Weight: 11.3kg

All parts are manufactured to a tolerance of +/- 0.2mm
Rollers must be clinched in blocks for reliability

20 Blue Moulded Tyre Rollers

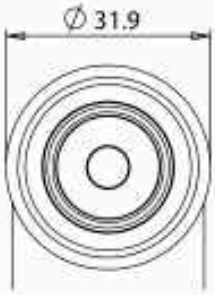

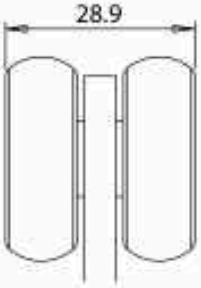

All rollers contain
Carbon chrome
Precision Bearings

UTS: 1800kg



NH529BMT
Box Qty: 100
Box Weight: 15.6kg



T529BMT
Box Qty: 25
Box Weight: 7.1kg



MB529BMT
Box Qty: 50
Box Weight: 9kg

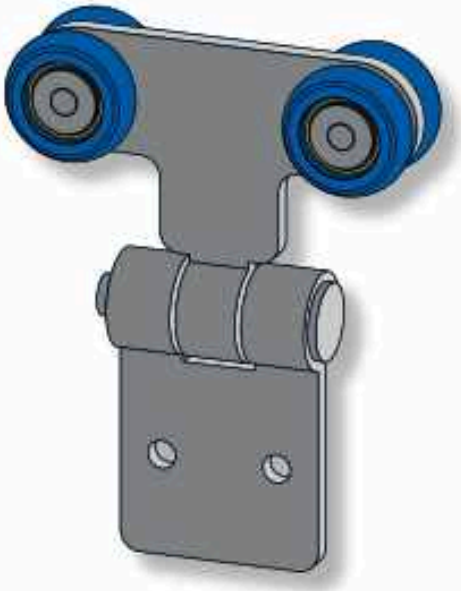

HTP529BMT
Box Qty: 25
Box Weight: 12kg

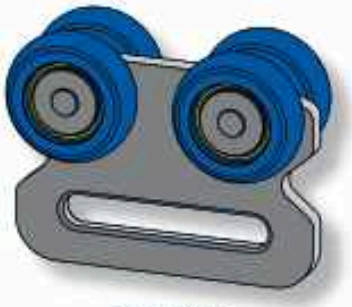

FF529BMT
Box Qty: 50
Box Weight: 10.5kg

Contents Page
Curtain Rollers

Telephone: +44(0)1691 670536

All parts are manufactured to a tolerance of 4 or -0.2mm.
Rollers must be checked to tractor for suitability.

Rollers Natural Flat Tyre 21



NH531NFT
Box Qty: 50
Box Weight: 8.3kg



T531WNFT
(Tripple Roller)
Box Qty: 25
Box Weight: 8.3kg

T531NFT
Box Qty: 25
Box Weight: 8kg



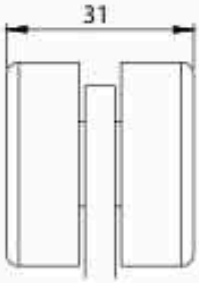

All rollers contain
Carbon Chrome
Precision Bearings

UTS: 1800kg



MB531NFT
Box Qty: 50
Box Weight: 7.1kg

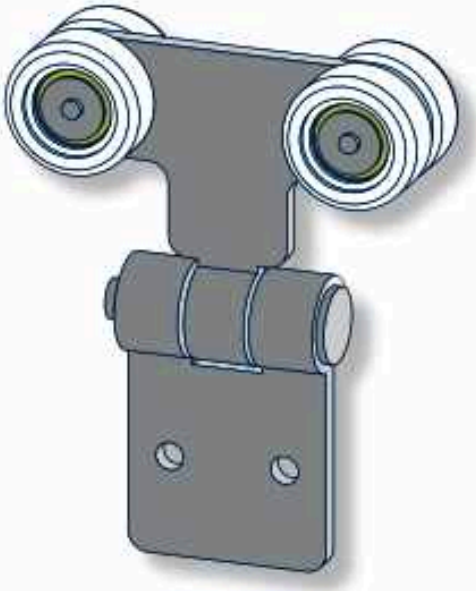

HTP531NFT
Box Qty: 25
Box Weight: 12.2kg



FF531NFT
Box Qty: 50
Box Weight: 12.8kg

All parts are manufactured to a tolerance of + or - 0.2mm
Rollers must be checked in tracks for suitability

22 Regular Bevel Tyre Rollers

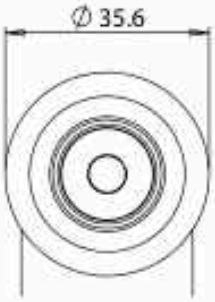

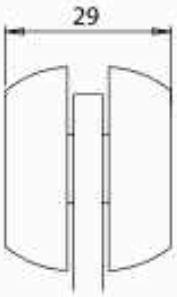

All rollers contain
Carbon Chrome
Precision Bearings

UTS: 1800kg



NH529RBT
Box Qty: 50
Box Weight: 8.5kg



T529WRBT
(Tripple Roller)
Box Qty: 25
Box Weight: 7.5kg

T529RBT
Box Qty: 25
Box Weight: 7.5kg



MB529RBT
Box Qty: 50
Box Weight: 8.9kg

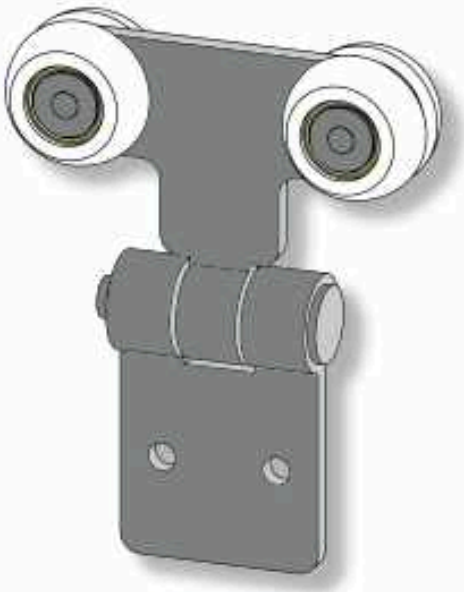

HTP529RBT
Box Qty: 25
Box Weight: 11.1kg



FF529RBT
Box Qty: 50
Box Weight: 10.5kg

Contents Page
Curtain Rollers

Telephone: +44(0)1691 670536

All parts are manufactured to a tolerance of +1 or -0.2mm. Rollers must be checked by user for suitability.

Rollers Natural Small Tyre 23



NH531NST
Box Qty: 50
Box Weight: 7.1kg



T531NST
Box Qty: 25
Box Weight: 7.9kg

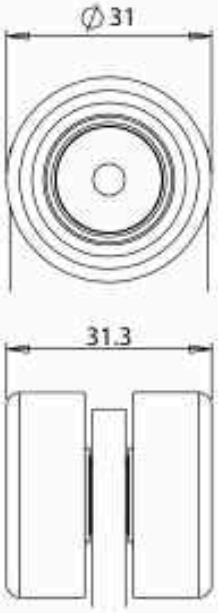

All rollers contain Carbon Chrome Precision Bearings

UTS: 1800kg



MB531NST
Box Qty: 50
Box Weight: 9kg

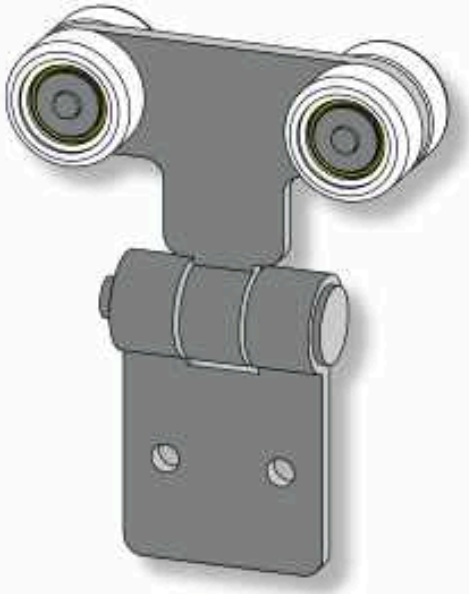

HTP531NST
Box Qty: 25
Box Weight: 12.2kg



FF531NST
Box Qty: 50
Box Weight: 10.5kg

All parts are manufactured to a tolerance of +/- 0.2mm
Rollers must be checked in trucks for suitability

All parts are manufactured to a tolerance of + or - 0.2mm.
Rollers must be checked in tracks for suitability.

Bobbin Rollers

Bearing Bobbin Rollers 24

WBA29MT 30
31.9mm DIA. 28.9mm Across Wheel

WBA24S 30
33mm DIA. 23.4mm Across Wheel

WBA27S 30
33mm DIA. 26.5mm Across Wheel

WBA30S 30
33mm DIA. 29.4mm Across Wheel

WBA30EF 30
36.7mm DIA. 30mm Across Wheel

WBA30GB 31
35.2mm DIA. 30mm Across Wheel

WBA28NS 31
30.8mm DIA. 27.7mm Across Wheel

WBA30NS 31
30.8mm DIA. 29.5mm Across Wheel

WBA31NS 31
30.8mm DIA. 31.2mm Across Wheel

WBA29BF 31
38.5mm DIA. 28.8mm Across Wheel

WBA32BB 32
35.5mm DIA. 31.4mm Across Wheel

WBA32CW 32
39.7mm DIA. 31.5mm Across Wheel

WBA36WF 32
36.8mm DIA. 36.6mm Across Wheel

WBA36NWF 32
35mm DIA. 35.5mm Across Wheel

BOB28SWLD 32
37.9mm DIA. 29.6mm Across Wheel

Solid Bobbin Rollers 25

BOB24R 33
30.4mm DIA. 23.8mm Across Wheel

BOB29B 33
31mm DIA. 28.8mm Across Wheel

BOB29N 33
33.25mm DIA. 28.5mm Across Wheel

BOB31N 33
31mm DIA. 31.2mm Across Wheel

BOB32B 33
34.1mm DIA. 32.1mm Across Wheel

BOB30GB 34
34.75mm DIA. 29.5mm Across Wheel

BOB36G 34
35.8mm DIA. 35.8mm Across Wheel

Waisted Rings 26

35

Contents Page

24 Bearing Bobbin Rollers

WBA29MT

29mm Moulded Tyre Bobbin Roller with Carbon Chrome Precision Bearings

UTS: 1800kg
Box Qty: 200
Box Weight: 9.6kg



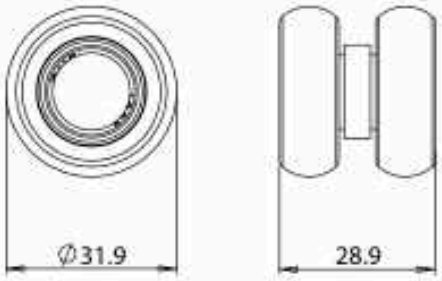

WBA24S

24mm Small Wheel Bobbin Roller with Stainless Steel Balls

UTS: 1800kg
Box Qty: 200
Box Weight: 8.5kg



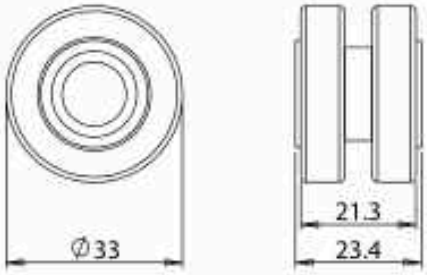

WBA27S

27mm Small Wheel Bobbin Roller with Stainless Steel Balls

UTS: 1800kg
Box Qty: 200
Box Weight: 8.5kg



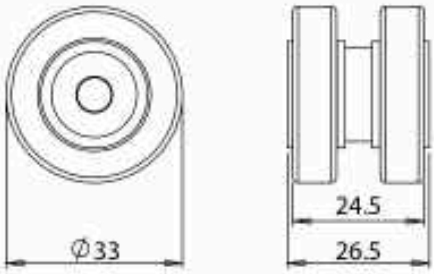

WBA30S

30mm Small Wheel Bobbin Roller with Stainless Steel Balls

UTS: 1800kg
Box Qty: 200
Box Weight: 8.5kg



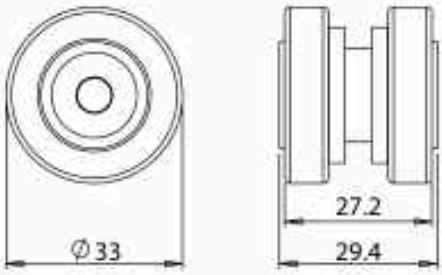

WBA30EF

30mm Eco Flat Bobbin Roller with Stainless Steel Balls

UTS: 1800kg
Box Qty: 200
Box Weight: 10kg



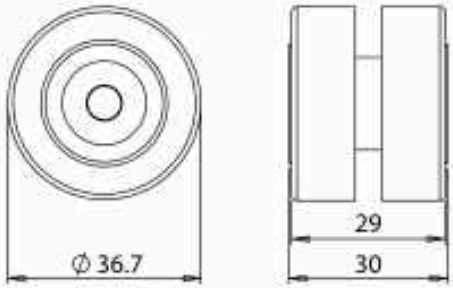

Contents Page
Bobbin Rollers

Telephone: +44(0)1691 670536

All parts are manufactured to a tolerance of +/- 0.2mm. Rollers must be checked to match for suitability.

Bearing Bobbin Rollers 24





WBA30GB

30mm Grey Bevel Bobbin Roller with Stainless Steel Balls

UTS: 1800kg
Box Qty: 100
Box Weight: 4.4kg

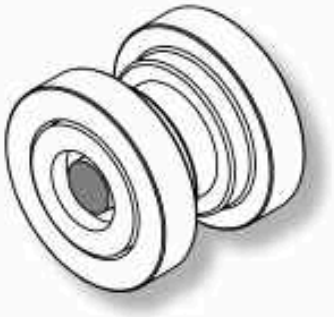



WBA28NS

28mm Natural Small Bobbin Roller with Stainless Steel Balls

UTS: 1800kg
Box Qty: 200
Box Weight: 7kg





WBA30NS

30mm Natural Small Bobbin Roller with Stainless Steel Balls

UTS: 1800kg
Box Qty: 100
Box Weight: 5.5kg

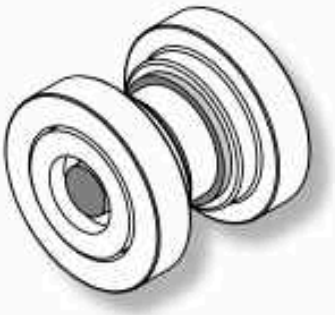



WBA31NS

31mm Natural Small Bobbin Roller with Stainless Steel Balls

UTS: 1800kg
Box Qty: 200
Box Weight: 11kg





WBA29BF

29mm Braidex Flat Bobbin Roller with Stainless Steel Balls

UTS: 1800kg
Box Qty: 100
Box Weight: 5.5kg
Requires WR52
Not suitable for WR1

Bobbin Rollers | Contents Page

All parts are manufactured to a tolerance of +/- 0.2mm
Rollers must be checked in tracks for suitability

24 Bearing Bobbin Rollers

WBA32BB

32mm Blue Bevel Bobbin Roller with Stainless Steel Balls

UTS: 1800kg
Box Qty: 200
Box Weight: 10kg



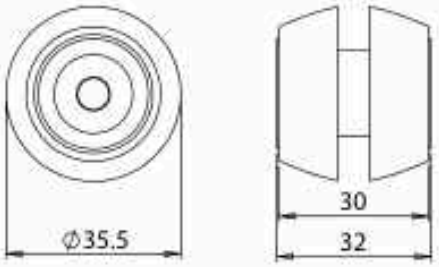

WBA32CW

32mm Cartwright Wheel Bobbin Roller with Stainless Steel Balls

UTS: 1800kg
Box Qty: 100
Box Weight: 6kg

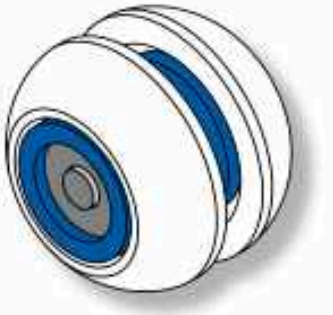

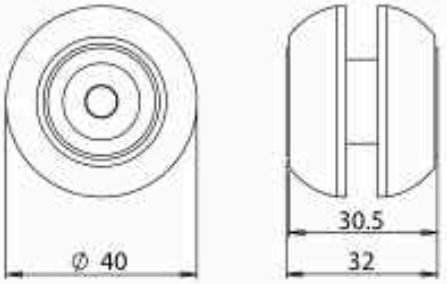

WBA36WF

36mm Wide Flat Bobbin Roller with Stainless Steel Balls

UTS: 1800kg
Box Qty: 100
Box Weight: 6kg



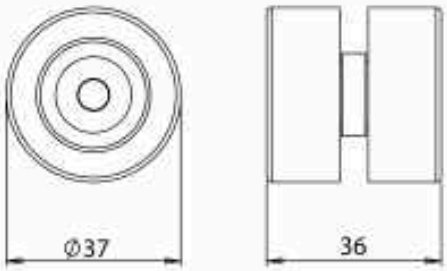

WBA36NWF

36mm Natural Wide Flat Bobbin Roller with Stainless Steel Balls

UTS: 1800kg
Box Qty: 100
Box Weight: 6kg



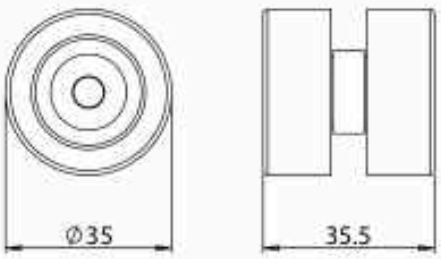

BOB28SWLD

28mm Steel Wheel Bobbin Roller with Stainless Steel Balls

UTS: 1800kg
Box Qty: 100
Box Weight: 9.6kg



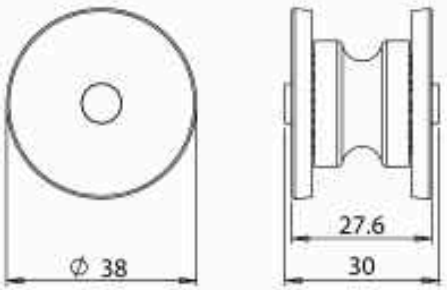

Contents Page
Bobbin Rollers

Telephone: +44(0)1691 670536

All parts are manufactured to a tolerance of +/- 0.2mm. Rollers must be checked to match for suitability.

Solid Rollers Bobbin 25

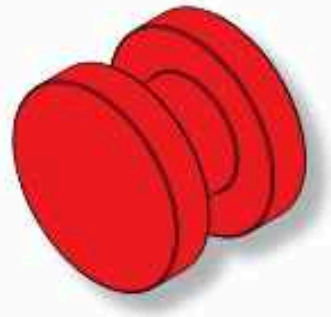



BOB24R

24mm Red Bobbin

UTS: 1800kg
Sack Qty: 500
Sack Weight: 6.7kg

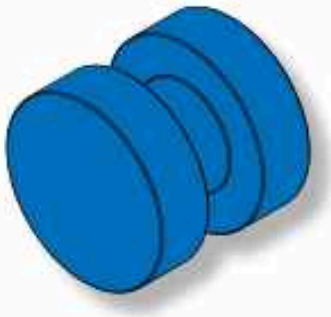

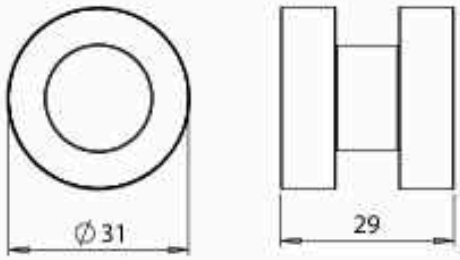

BOB29B

29mm Blue Bobbin

UTS: 1800kg
Sack Qty: 500
Sack Weight: 12kg

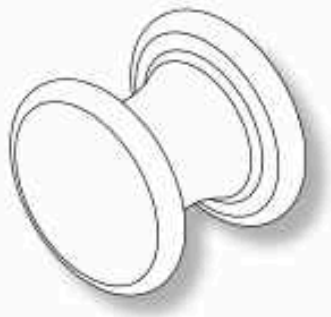

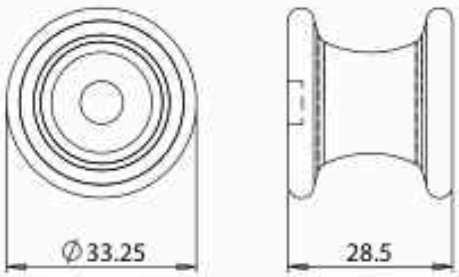

BOB29N

29mm Natural Bobbin

UTS: 1800kg
Sack Qty: 500
Sack Weight: 7kg

Fits Steel Henderson Track

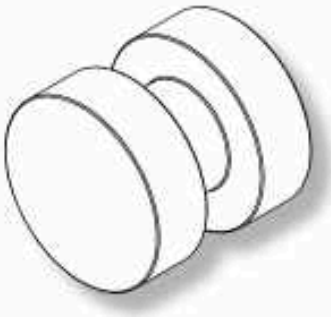

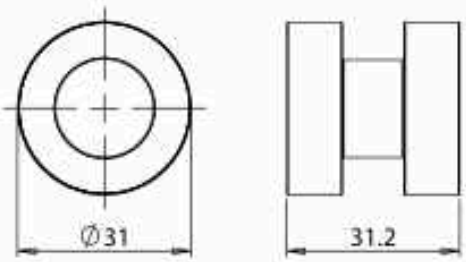

BOB31N

31mm Natural Bobbin

UTS: 1800kg
Sack Qty: 500
Sack Weight: 7kg



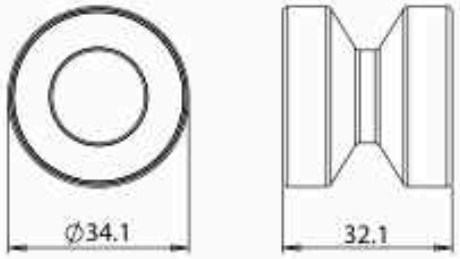

BOB32B

32mm Black Bobbin

UTS: 1800kg
Sack Qty: 500
Sack Weight: 15kg

All parts are manufactured to a tolerance of +/- 0.2mm.
Rollers must be checked in tracks for suitability.

25 Solid Bobbin Rollers

BOB30GB

30mm Green Bobbin

UTS: 1800kg
Sack Qty: 500
Sack Weight: 11kg

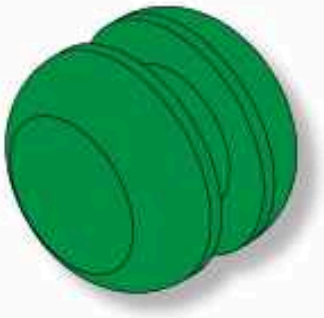

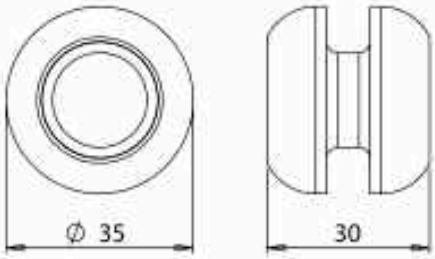

BOB36G

36mm Grey Bobbin

UTS: 1800kg
Sack Qty: 500
Sack Weight: 11kg



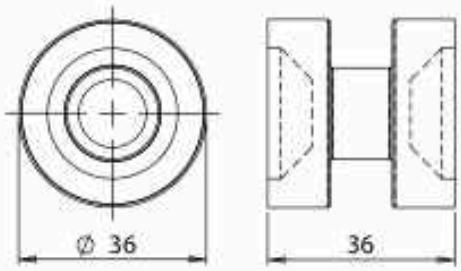

Waisted Rings 26

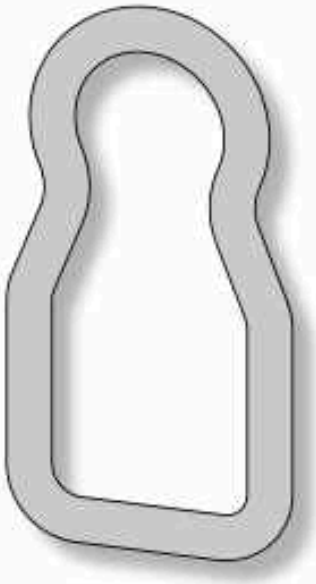

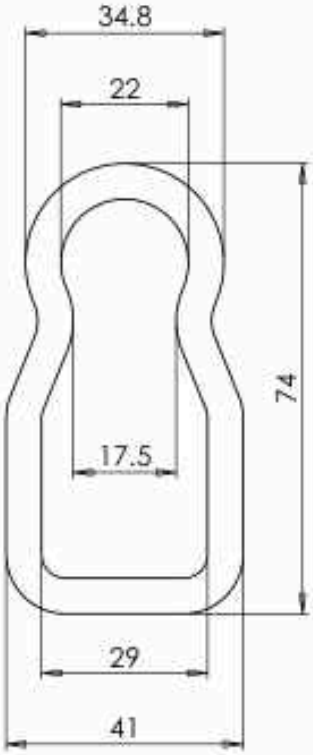

WR1

17mm Centre DIA Waisted Ring

UTS: 1800kg
Sack Qty: 500
Sack Weight: 20.1kg

Not suitable for WBA29BF

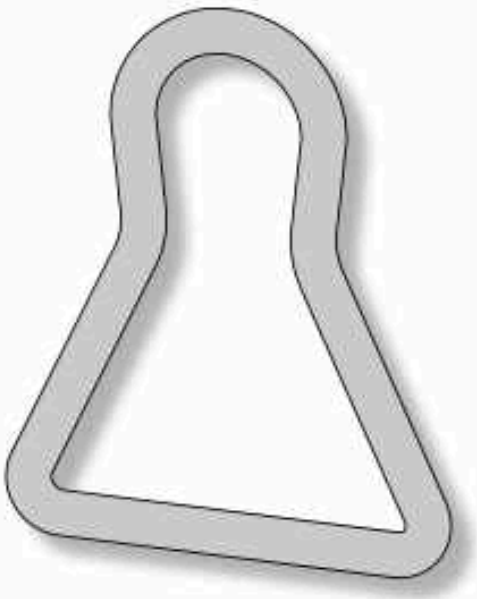

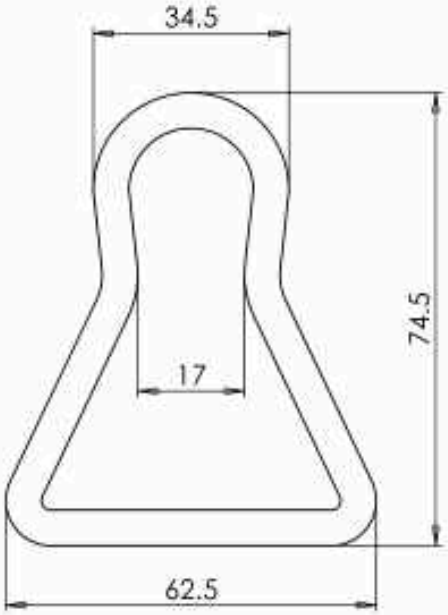

WR52

17mm Centre DIA Waisted Ring

UTS: 1800kg
Sack Qty: 300
Sack Weight: 15kg

All parts are manufactured to a tolerance of + or - 0.2mm.
Rollers must be checked in tracks for suitability.

Load Securing Equipment

Buckles 27

SSOC01 38
304S/S Stainless Steel Over Centre Buckle - 50mm Webbing

SSOC02 38
304S/S Stainless Steel Over Centre Buckle - 45mm Webbing

ASLB01 39
304S/S Anti-Slip Locking Buckle - 45mm Webbing

TLLB01 39
304S/S Anti-Slip Pull Down Buckle - 45mm Webbing

Hooks 28

CRH01 40
Closed Rave Hook

FH01
Flat Hook 40

PH01 40
Pallet Hook

Straps 29

PPBS01 41
Strap with Closed Rave Hook - Polypropylene

PEBS01 41
Strap with Closed Rave Hook - Polyester

PPBS02 41
Strap with Flat Hook - Polypropylene

PEBS02 41
Strap with Flat Hook - Polyester

P.V.C 30

PVC01B 42
Black

PVC01G 42
Grey

PVC01W 42
White

Accessories 31

242090 42
3 Bar Slide - Zinc Plated

242091 42
Snap Hook - Zinc Plated

Ratchet Straps 32

SRA01 43
Standard Ratchet Assembly

SCRA01 43
Slide & Carry Ratchet Assembly

Contents Page

27 Buckles

SSOC01

304S/S Stainless Steel
Over Centre Buckle

50mm Webbing

UTS: 1200kg

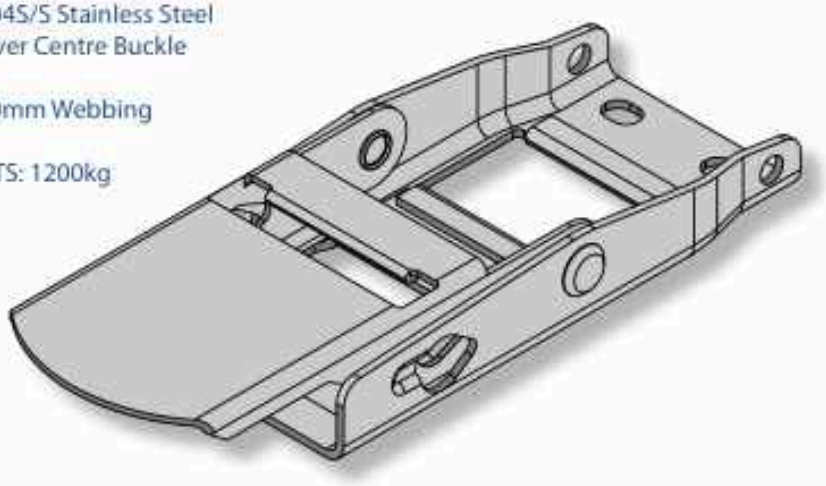

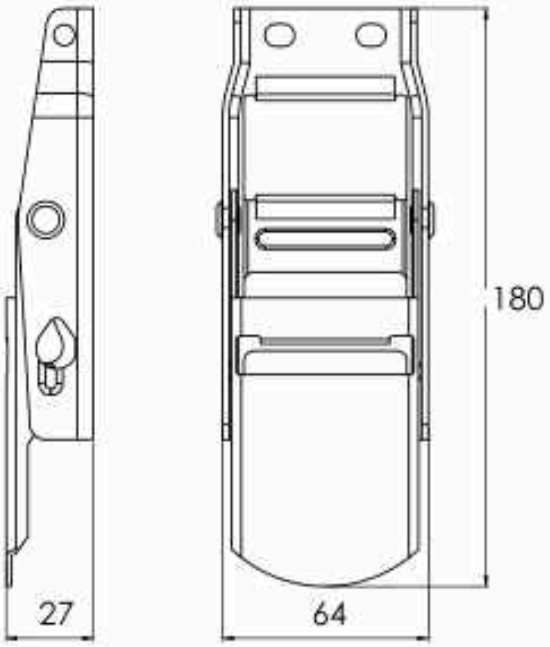

SSOC02

304S/S Stainless Steel
Over Centre Buckle

45mm Webbing

UTS: 1100kg

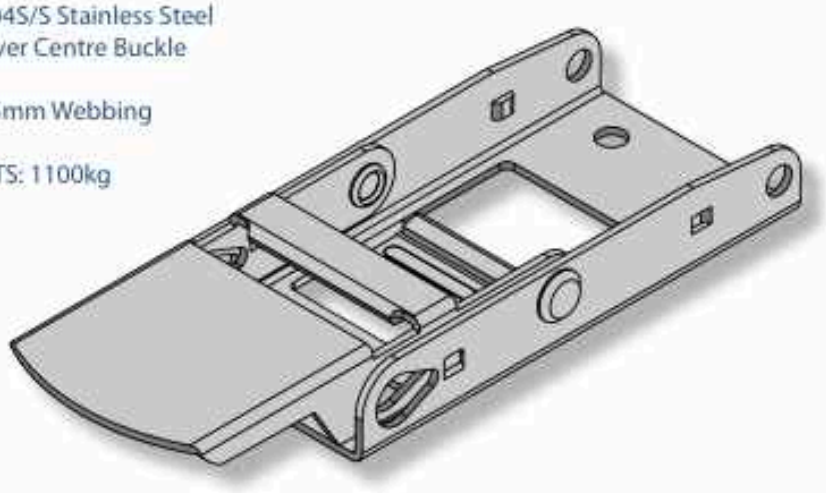

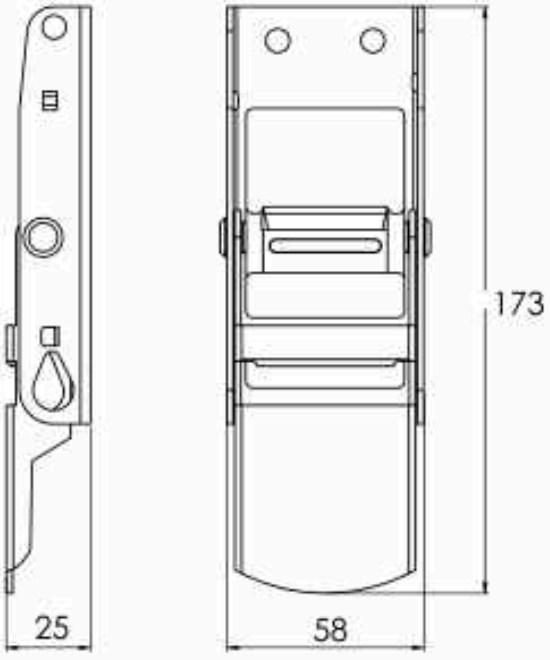

Contents Page
Load Securing Equipment

Telephone: +44(0)1691 670536

All parts are manufactured to a tolerance of 4 or -0.2mm.
Rollers must be checked to tracks for suitability.

ASLB01

304S/S Anti-Slip Locking Buckle

45mm Webbing

UTS: 1400kg

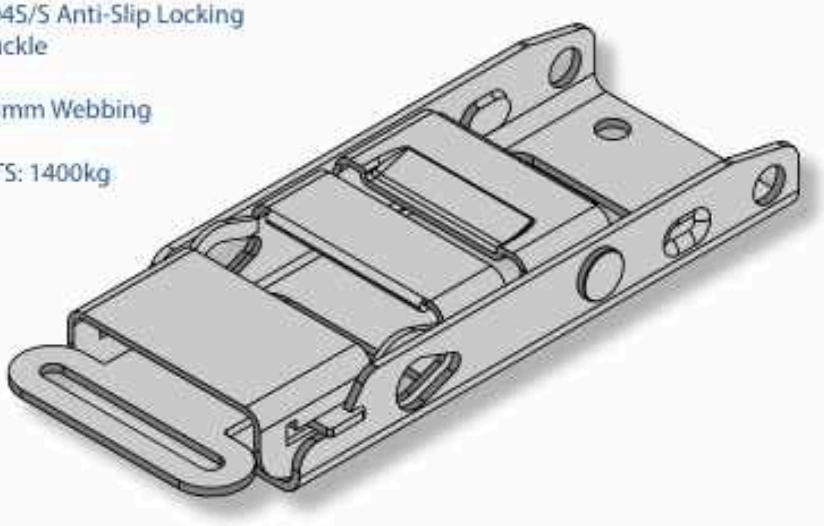

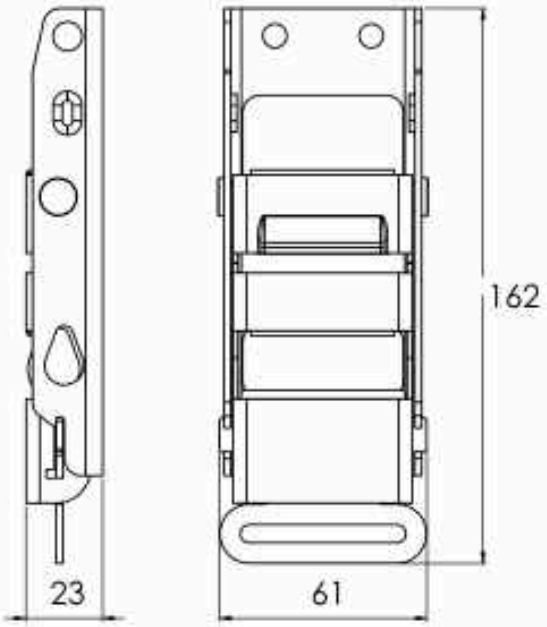

TLLB01

304S/S Anti-Slip Push Up Buckle

45mm Webbing

UTS: 1400kg

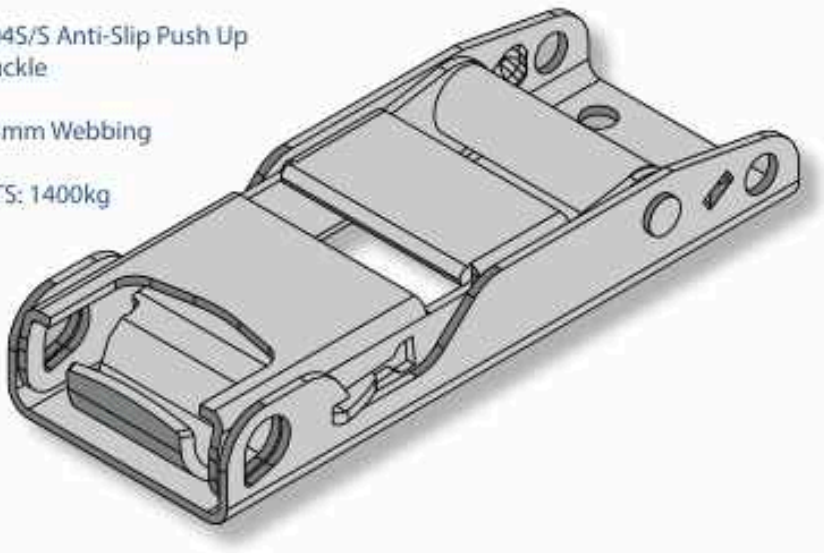

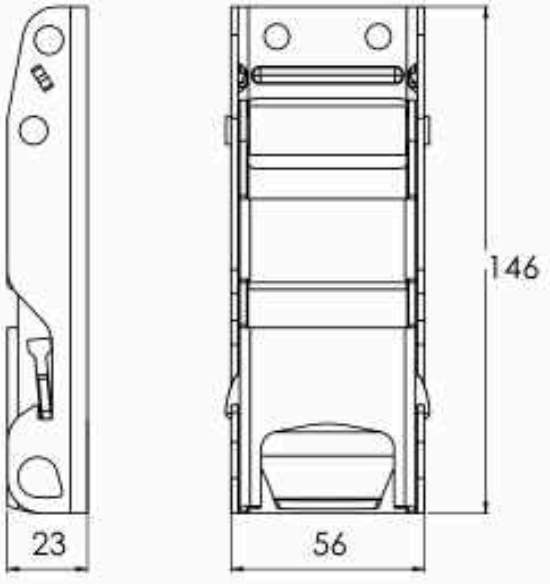

All parts are manufactured to a tolerance of +/- 0.2mm
Rollers must be checked in blocks for suitability

28 Hooks

Closed Rave Hooks

CRH01 - Zinc Plated

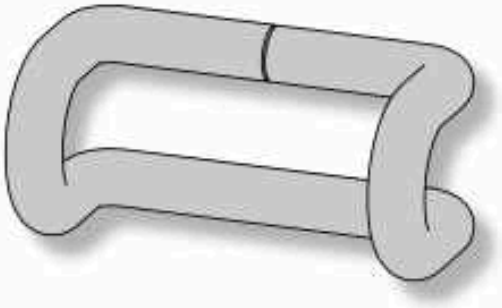

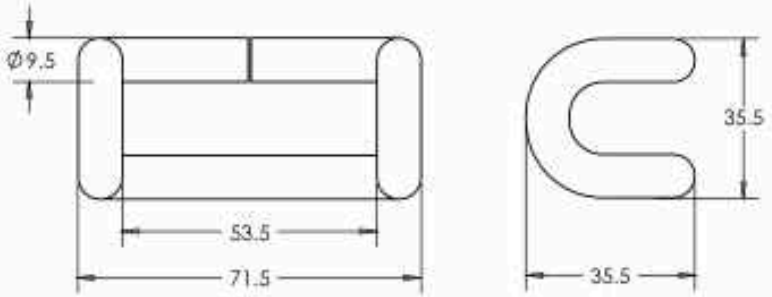

Flat Hooks

FH01 - Stainless Steel

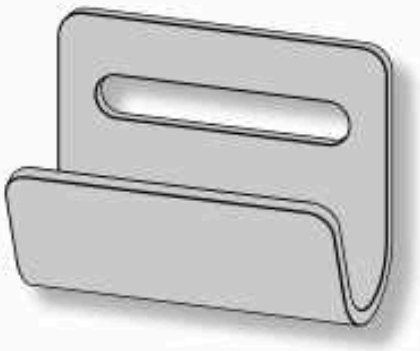

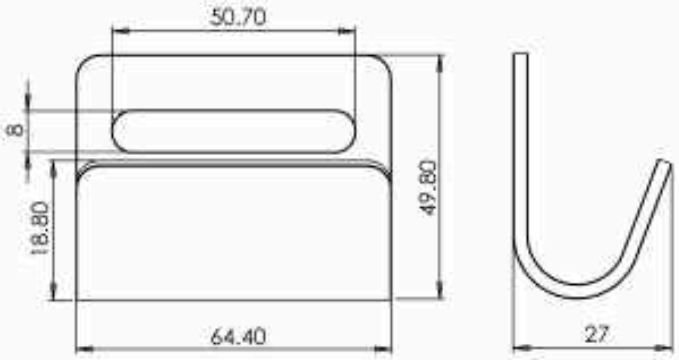

Pallet Hooks

PH01 - Polypropylene



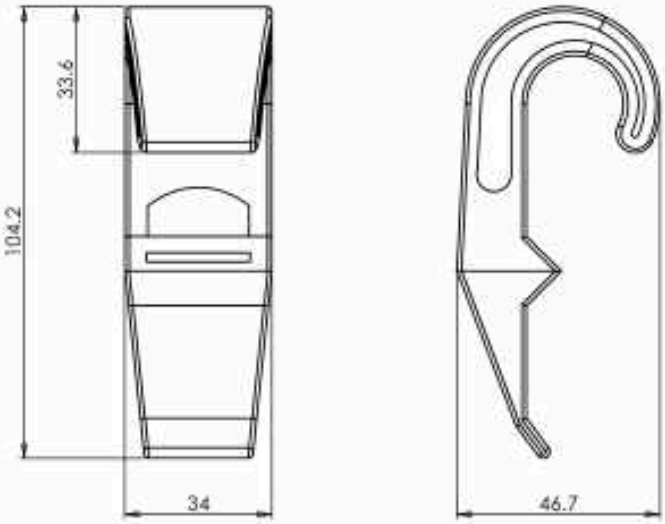

Straps 29



84cm Standard Length Strap with a Zinc Plated Closed Rave Hook (CRH01)

PPBS01

Polypropylene

UTS: 1400kg

PEBS01

Polyester

UTS: 2400kg



84cm Standard Length Strap with a stainless steel flat hook (FH01)

PPBS02

Polypropylene

UTS: 1400kg

PEBS02

Polyester

UTS: 2400kg

Any length available on request

All parts are manufactured to a tolerance of + or - 2.5mm
Rollers must be checked in blocks for suitability

30 P.V.C

PVC01W - White

PVC01G - Grey

PVC01B - Black

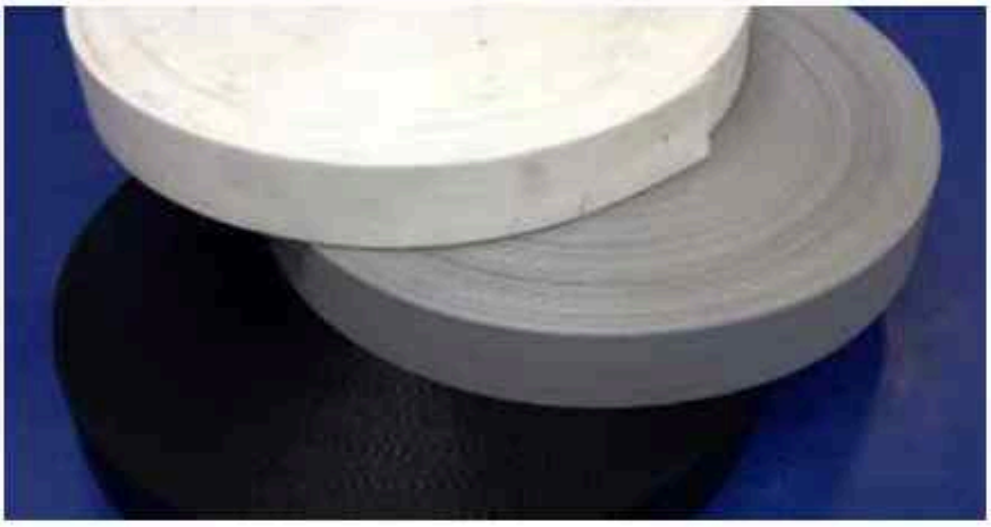

All P.V.C comes in
Boxes of 500m

31 Accessories

242090

3BARSLIDEZP

3 Bar Slide - Zinc Plated

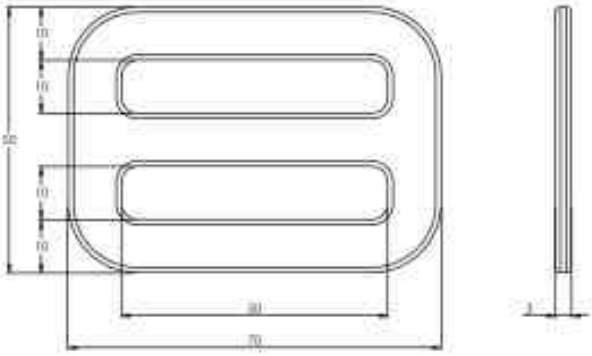



242091

Snap Hook - Zinc Plated

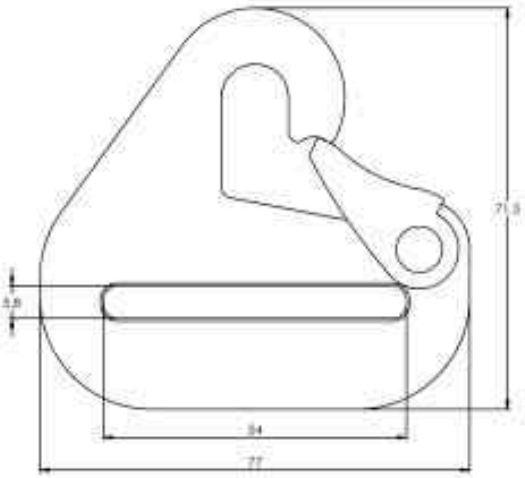



Contents Page
Load Securing Equipment

Telephone: +44(0)1691 670536

All parts are manufactured to a tolerance of 1 or - 0.2mm.
Rollers must be checked to ensure fit suitability.

Ratchet Straps 32

SRA01

5 ton ratchet

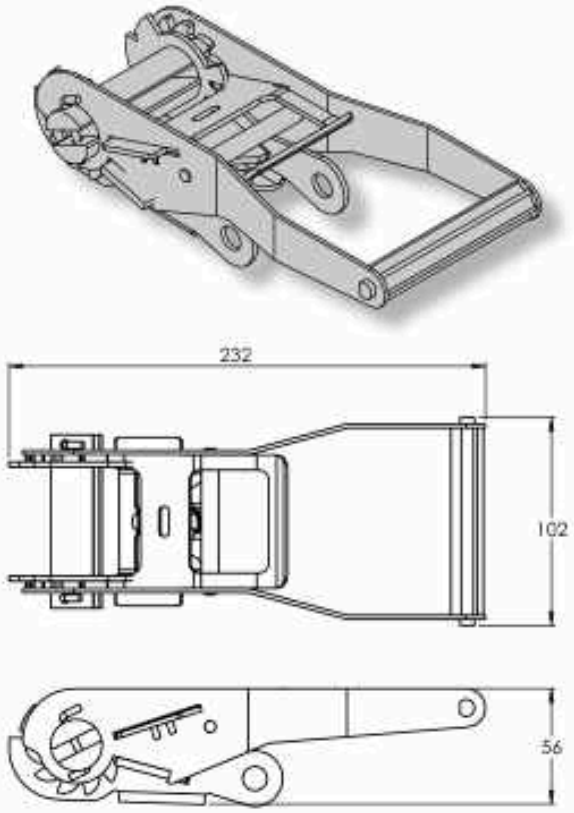

SCRA01

5 ton ratchet with standard length strap

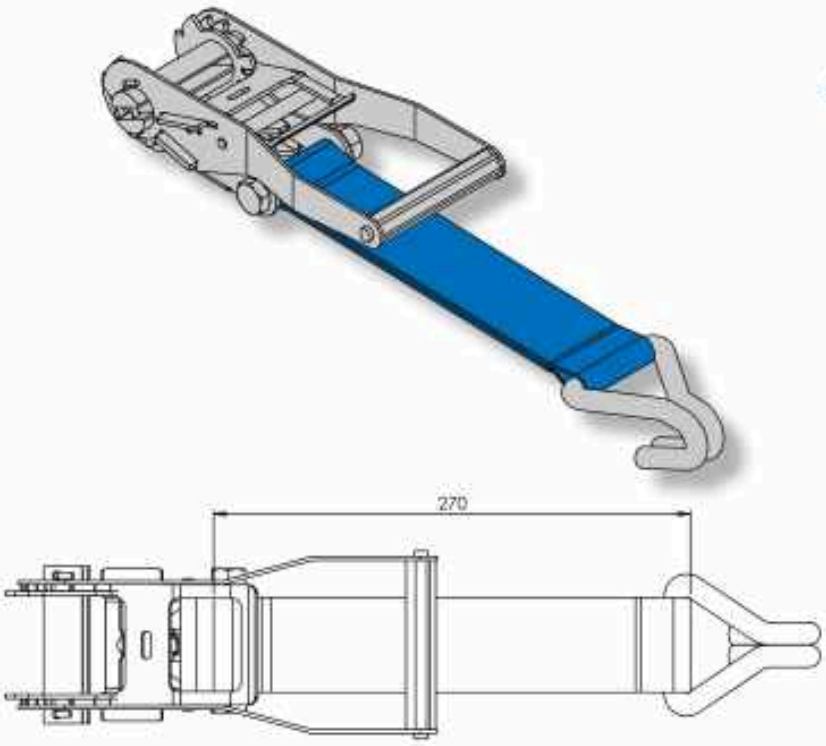

All parts are manufactured to a tolerance of +/- 0.2mm
Rollers must be checked in tracks for suitability

All parts are manufactured to a tolerance of + or - 0.2mm.
Rollers must be checked in tracks for suitability.

Fixings

Backplates 33

BP1-12 46
10mm Thread Length Backplates

BP1 46
13mm Thread Length Backplates

BP2 46
18.2mm Thread Length Backplates

BP3 47
13mm Thread Length Backplates

BP4 47
17mm Thread Length Backplates

Contents Page

33 Backplates

All backplates contain Stainless Steel M6 bolts

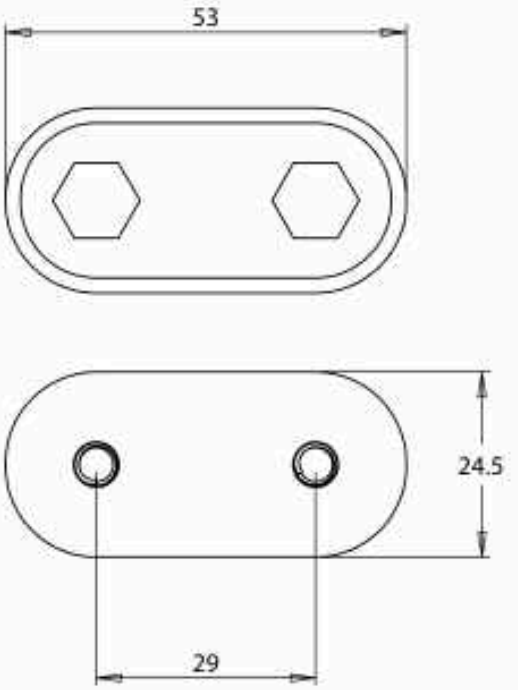

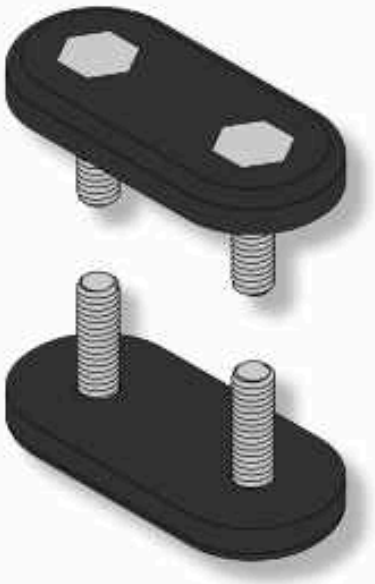

BP1-12

10.2mm Thread Length Backplates
Box Qty: 250
Box Weight: 4.1kg

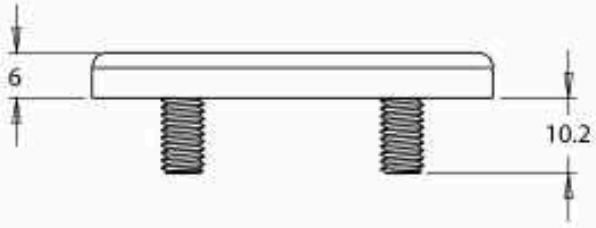

BP1

13mm Thread Length Backplates
Box Qty: 250
Box Weight: 4.5kg

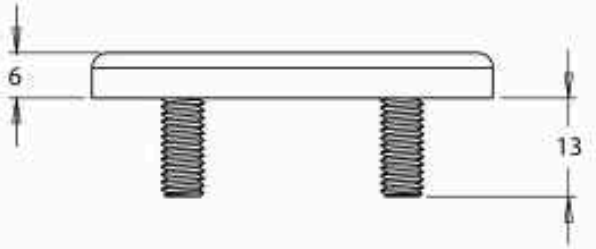

BP2

18.2mm Thread Length Backplates
Box Qty: 250
Box Weight: 4.8kg

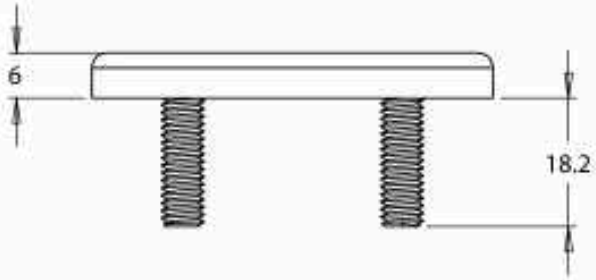

Available with A2-70 Stainless Steel Nylock BPN

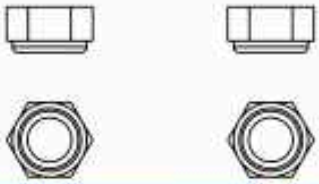

Contents Page Fixings

Telephone: +44(0)1691 670536

All parts are manufactured to a tolerance of +/- 0.2mm. Rollers must be checked by hand for suitability.

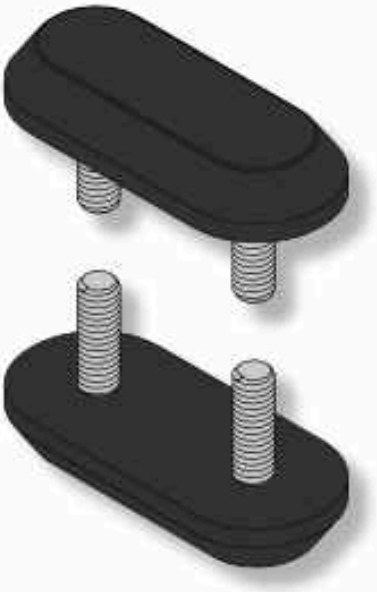

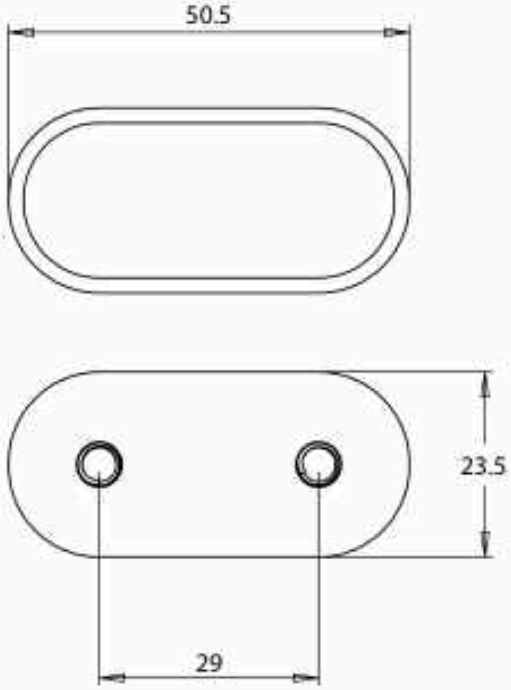

All backplates contain
Stainless Steel M6 bolts

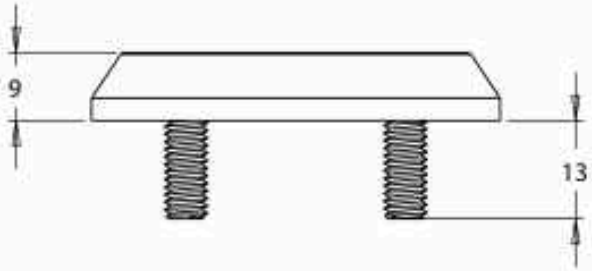

BP3

13mm Thread Length
Backplates
Box Qty: 250
Box Weight: 4.9kg

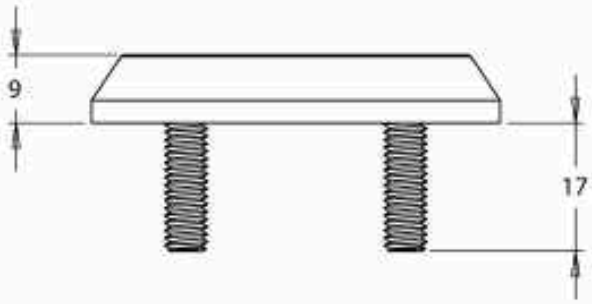

BP4

17mm Thread Length
Backplates
Box Qty: 250
Box Weight: 4.1kg

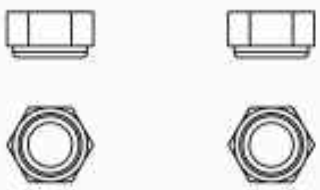

Available with A2-70
Stainless Steel Nylock
BPN

All parts are manufactured to a tolerance of + or - 0.2mm
Rollers must be checked in blocks for suitability

All parts are manufactured to a tolerance of + or - 0.2mm.
Rollers must be checked in tracks for suitability.

Slide & Carry

Net System

44ft trailer 50

26ft trailer 50

Strap System

44ft trailer 51

26ft trailer 51

Double Deck System 52

Slide & Carry 34

Roof Retractable Load Securing Systems

Quicker and Safer Load Restraint System launched due to the increasing demand for a truly driver friendly Roof Retracting Load Restraint System. The system is designed to fit into the Internal Cargo Strap Tracks that are usually present in most trailers and is therefore perfect for retro fit or New Build. The emphasis is on ease of use and improving drop off and collection speed, the straps or nets glide in the vehicle roof with very little or no effort.





Slide & Carry - Net System

Typical Installation

44ft trailer

Full Net System

26ft Trailer

Full Net System

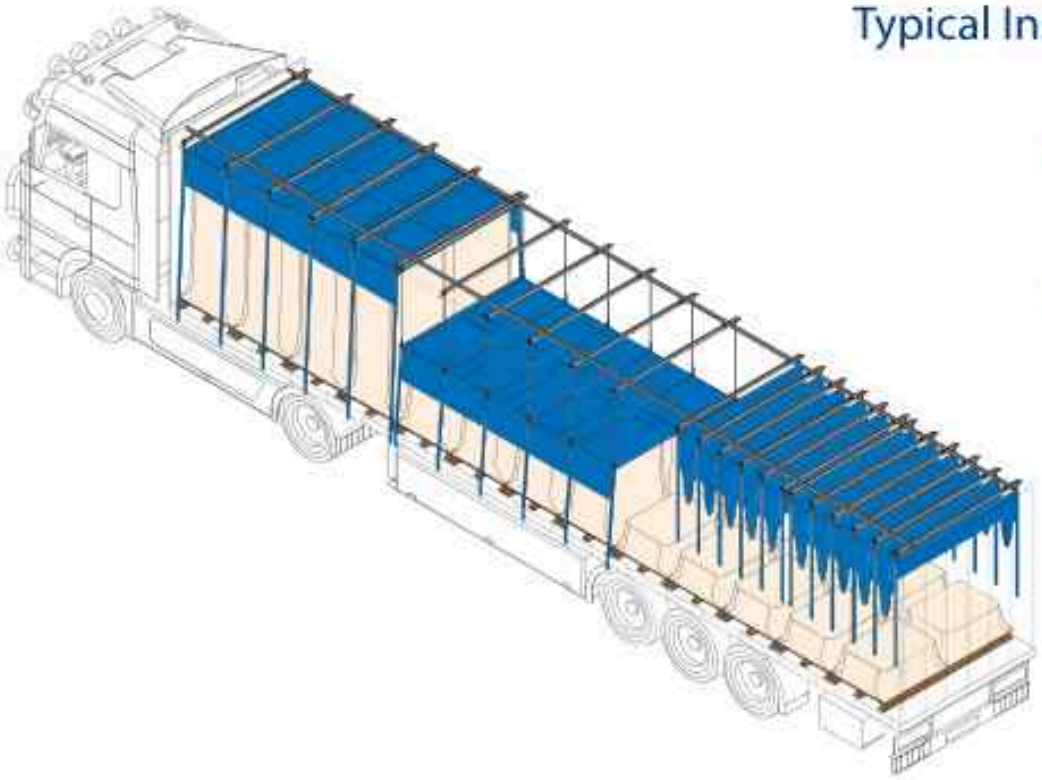

Contents Page Slide & Carry

Slide & Carry - Strap System

Typical Installation

44ft trailer

13 Straps including Carry Beam and Ratchet Assembly

26ft Trailer

8 Straps including Carry Beam and Ratchet Assembly

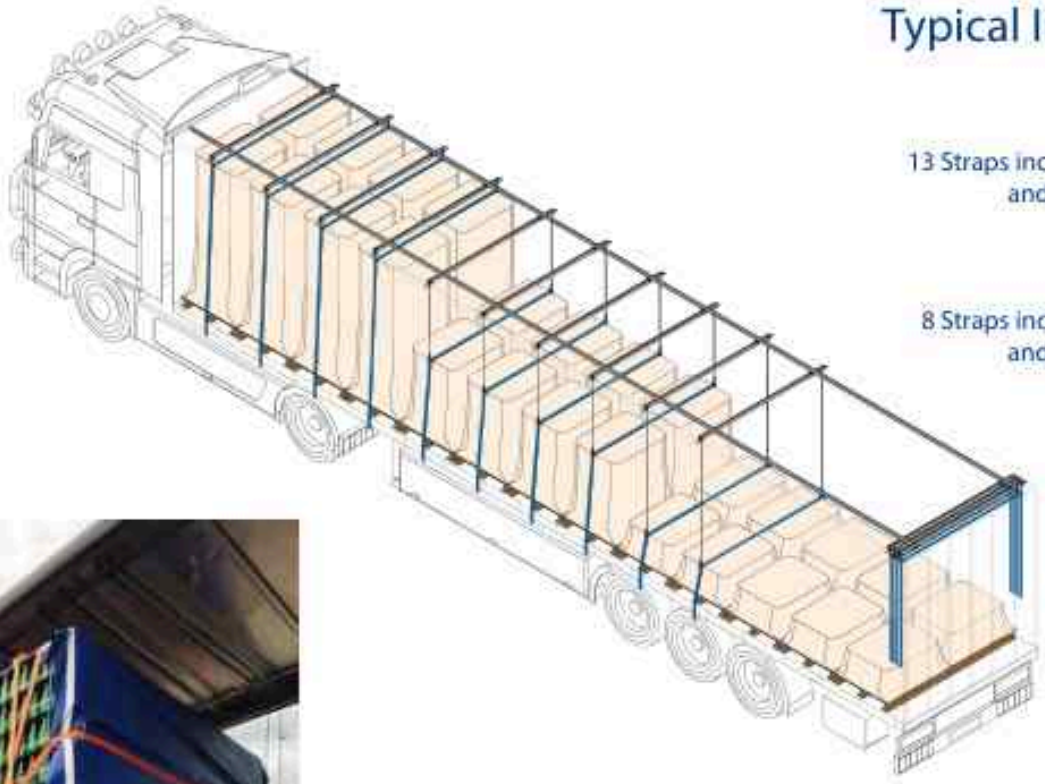





VOSA's wording from their paper on:-

Policy Guidance for Load Securing

6. Load Security Vehicle Examinations

Load securing is achieved by using the load securing system. This consists of one or more of:

The vehicle structure
Intermediate bulkheads, chocks, wells, blocking, dunnage etc
Lashings or similar systems
The weight of the load alone is not enough to prevent movement. Heavy loads can and do move under normal driving conditions.

When assessing a load, examiners should ask themselves four questions:

Can the load slide or topple forward or back?
Can the load slide or topple off the side of the vehicle?
Is the load unstable?
Is load securing equipment in poor condition?

If the answer to one or more of these questions is 'yes', the examiner should carry out a full assessment of the load as it may not be secure. The load does not necessarily have to have already moved for it to present a likely risk of danger to any person as defined under the Road Vehicles (Construction & Use) Regulations. However, if it has already moved, then the securing system is demonstrably inadequate.

Note on curtain-sided vehicles

The curtains of a standard curtain-sided vehicle are provided for weather protection and are not load securing. Anything attached to the superstructure, including buckle straps hanging from the roof rails, is not loaded securing.

There are two exceptions to this general rule:

1. Systems where ratchet straps or load securing tarpaulins are retained on bungee cords attached to the roof rails. The bungee cords are not used for load securing.

2. Vehicles constructed to the EN 12642:2006 'XL' standard. These are reinforced vehicles that allow the curtains alone to be used to contain 40% of the rated payload under certain conditions. Examiners should check that:

The load is loaded from the headboard and fills the length of the load bed

The gap between each side of the load and the curtains is approximately three inches or less

The total weight of the load does not exceed 14.4 tonnes (18 tonne vehicles), 19.2 tonnes (24 tonne vehicles) or 21.6 tonnes (27 tonne vehicles).

If any of these conditions are not met, the curtains are not sufficient and the load needs to be secured inside the vehicle.

All parts are manufactured to a tolerance of +/- 0.2mm
Rollers must be clinched in tracks for reliability

Slide & Carry - Double Deck System Now Available!

Typical Installation

A typical ratchet system for top and bottom decks.

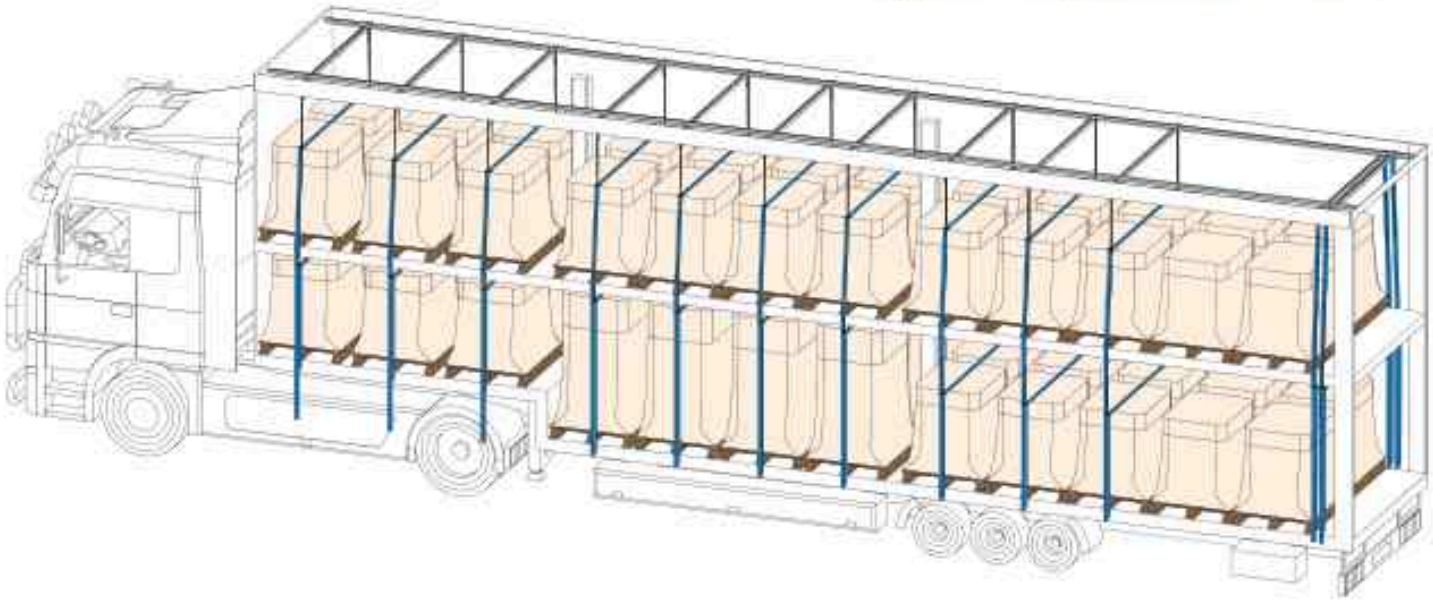





Please visit **cvrollers.com** for more information on all of our Slide & Carry systems

Contents Page Slide & Carry

Slide & Tilt

Slide & Tilt System 35

ST01-535 54
Standard Full Assembly Kit
with 535mm Track

ST01-1200 54
Standard Full Assembly Kit
with 1200mm Track

Aluminium Telescopic Slides 36

TSA2468 54
Aluminium Telescopic Slides in Various Lengths

Slam Locks 37

SLAM01-01 55
Standard Slam Lock Assembly Kit

LiLo-01 55
Lock in Lock Out kits available

Drawer Bobbins 38

DB-25-01-01 55
25mm (1 Inch) Drawer Bobbin

DB-50-01-01 55
50mm (2 Inch) Drawer Bobbin

DB-75-01-01 55
75mm (3 Inch) Drawer Bobbin

DB-100-01-01 55
100mm (4 Inch) Drawer Bobbin

DB-125-01-01 55
125mm (5 Inch) Drawer Bobbin

DB-150-01-01 55
150mm (6 Inch) Drawer Bobbin

Modular Tray Assemblies 39

MTA01-01 56

MTA02-01 56

Contents Page

35 Slide & Tilt System

Standard Size Slide & Tilt Kits:

ST01-535

Standard Full Assembly Kit with 535mm Track

ST01-1200

Standard Full Assembly Kit with 1200mm Track

Other Sizes Available.



36 Aluminium Telescopic Slides

Aluminium Telescopic Slides are available in Various Lengths begining with part no.

TSA2468-

with the slide length in mm on the end.

For example a 500mm length slide would have the part no. 'TSA2468-500'.

Sizes range from 350, 450 then incriments of 50mm upto 1600mm. 2m and 2.5m slides are also available.



Contents Page Slide & Tilt

Telephone: +44(0)1691 670536

All parts are manufactured to a tolerance of +/- 0.2mm. Rollers must be checked to ensure compatibility

Slam Locks 37

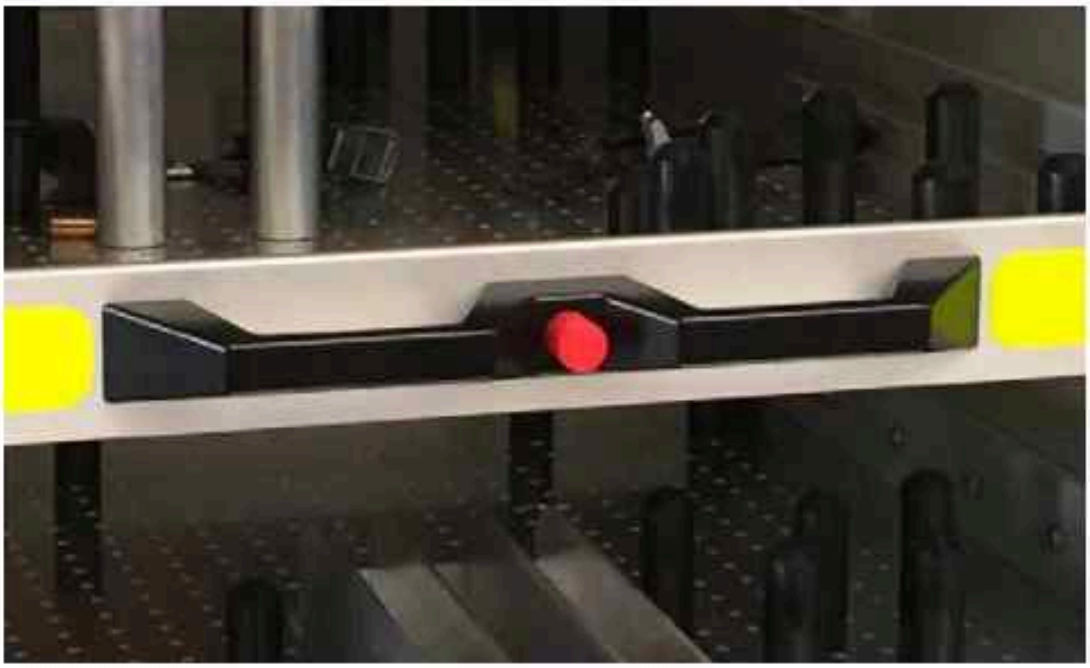

SLAM01-01

Slam Lock Standard Assembly Kit

LiLo-01

Lock in Lock Out Kits available

Drawer Bobbins 38

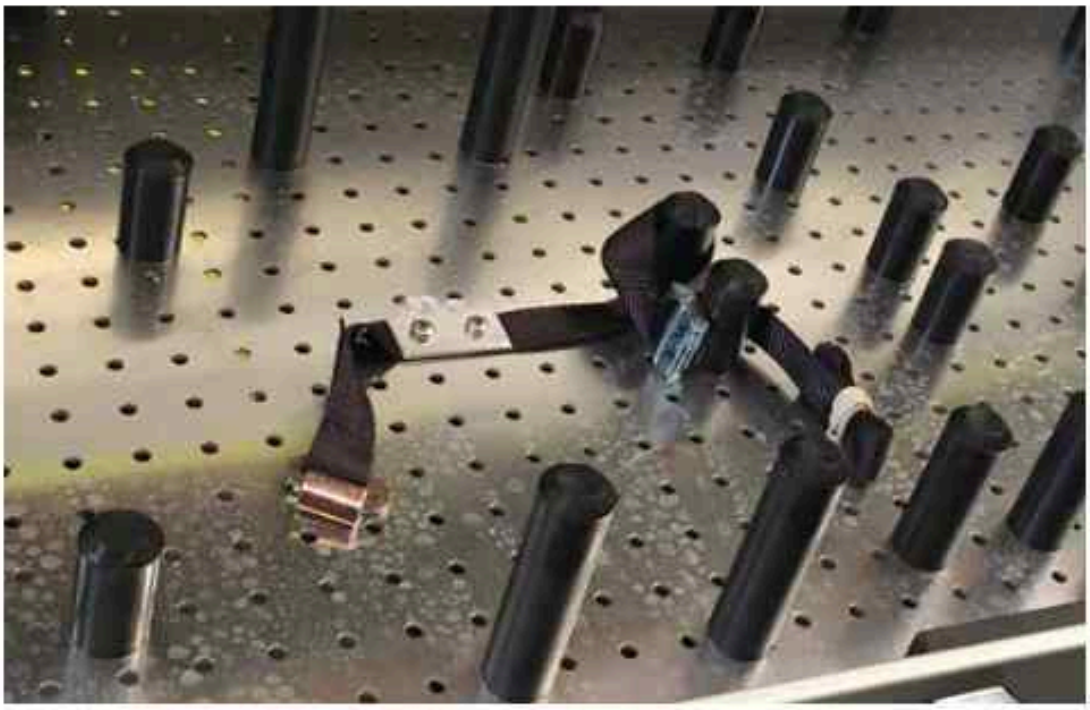

DB-25-01-01

25mm (1 Inch) Drawer Bobbin

DB-50-01-01

50mm (2 Inch) Drawer Bobbin

DB-75-01-01

75mm (3 Inch) Drawer Bobbin

DB-100-01-01

100mm (4 Inch) Drawer Bobbin

DB-125-01-01

125mm (5 Inch) Drawer Bobbin

DB-150-01-01

150mm (6 Inch) Drawer Bobbin

Slide & Tilt

Contents Page

39 Modular Tray Assemblies

MTA01-01

Complete modular tray assemblies

Bespoke sizes available
Completely wash down and corrosion resistant
Bonding agent stronger than the aluminium itself

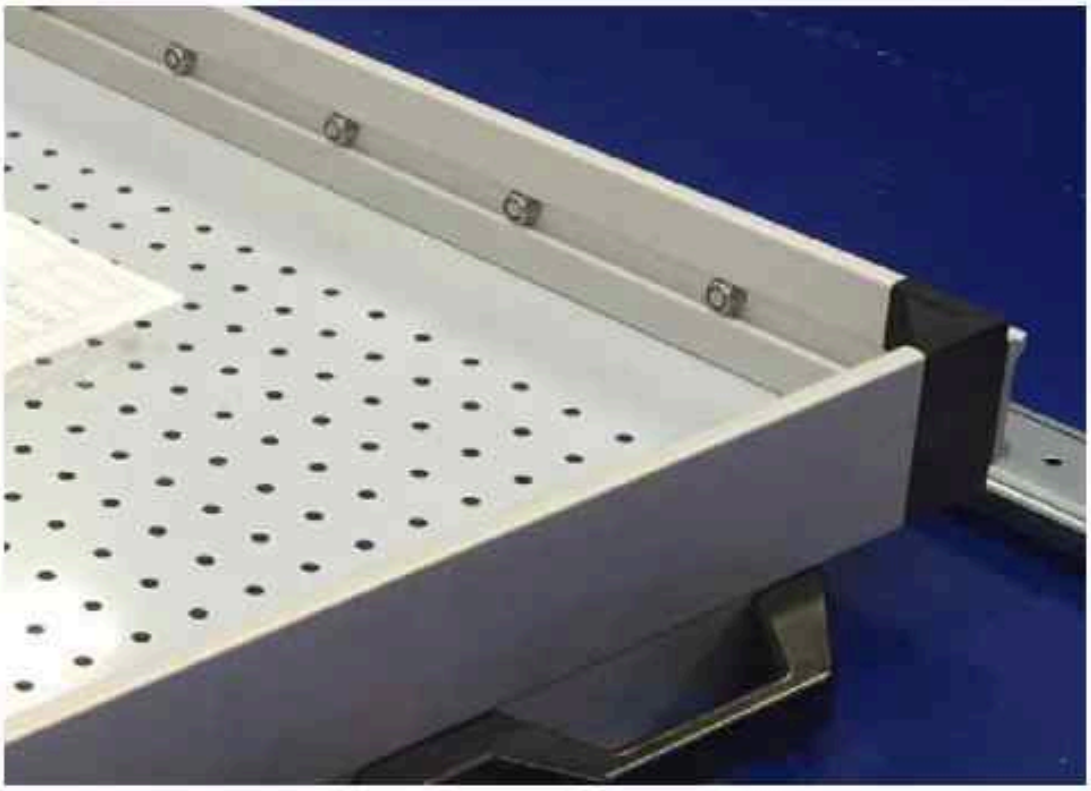

MTA02-01

Complete modular tray assemblies with LiLo Kits

Bespoke sizes available
Completely wash down and corrosion resistant
Bonding agent stronger than the aluminium itself

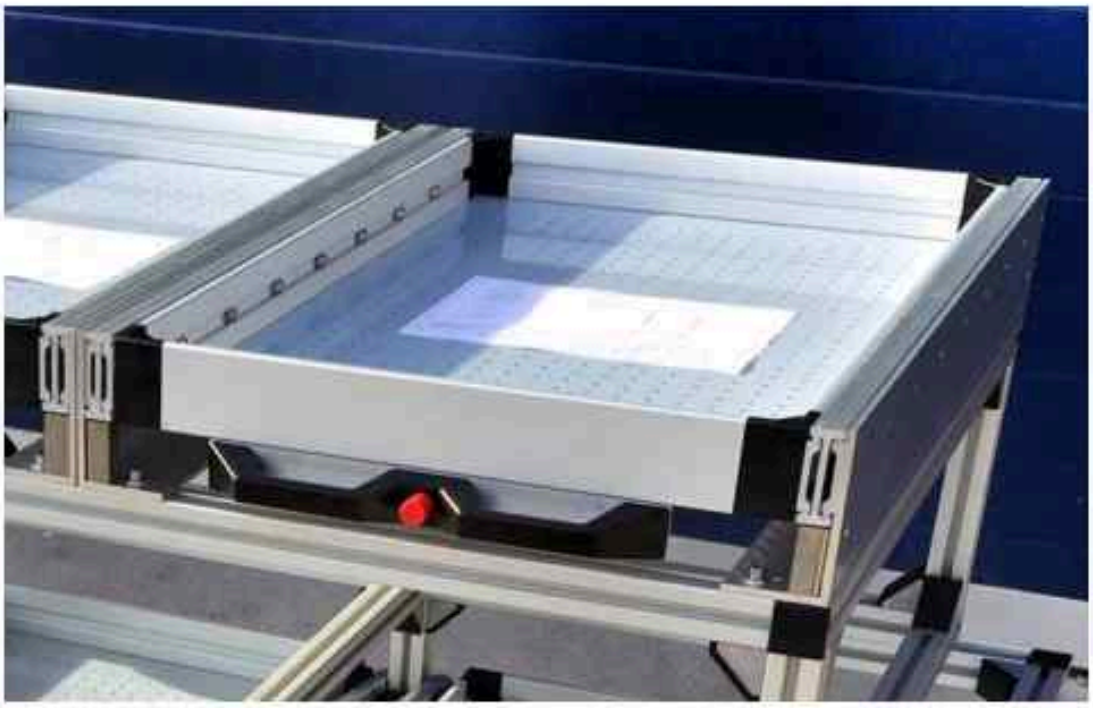

Contents Page
Slide & Tilt

Telephone: +44(0)1691 670536

All parts are manufactured to a tolerance of 1 or -0.2mm.
Rollers must be checked to ensure for suitability.

Conveyor Components

End Bearing Units 40

EBU20-17-6 58
20mm x 17mm x 6mm Bore EBU

EBU25-22-6 58
25mm x 22mm x 6mm Bore EBU

EBU25-22-8 58
25mm x 22mm x 8mm Bore EBU

EBU30-26.3-8 58
30mm x 26.3mm x 8mm Bore EBU

EBU30-26-7 58
30mm x 26mm x 7mm Bore EBU

EBU30-26-8 59
30mm x 26mm x 8mm Bore EBU

EBU30-26-10 59
30mm x 26mm x 10mm Bore EBU

EBU40-35.5-8 59
40mm x 35.5mm x 8mm Bore EBU

EBU40-35.5-8H 59
40mm x 35.5mm x 8mm Hex Bore EBU

EBU40-35.5-10 60
40mm x 35.5mm x 10mm Bore EBU

EBU40-35.5-11H 60
40mm x 35.5mm x 11mm Hex Bore EBU

EBU40-35-10 60
40mm x 35mm x 10mm Bore EBU

EBU48-45-8 60
48mm x 45mm x 8mm Bore EBU

EBU48-45-10 61
48mm x 45mm x 10mm Bore EBU

End Bearing Housings 41

EBH40-37 62
40mm x 37mm DIA End Bearing Housing

EBH50-45 62
50mm x 45mm DIA End Bearing Housing

EBH50-47 62
50mm x 47mm DIA End Bearing Housing

End Bearing Bungs 42

EBB60-51 63
60mm x 51mm DIA End Bearing Bung

EBB60-54 63
60mm x 54mm DIA End Bearing Bung

EBB60-56 63
60mm x 56mm DIA End Bearing Bung

Skate Wheels 43 64

SABU's 44 65

Assembled Poultry Chains 45 66-67

Poultry Components 46 68-69

Contents Page

40 End Bearing Units

EBU20-17-6

20mm x 17mm End Bearing Unit with a 6mm Bore and Stainless Steel Balls
Finish: Yellow
Bag Qty: 500
Bag Weight: 4kg

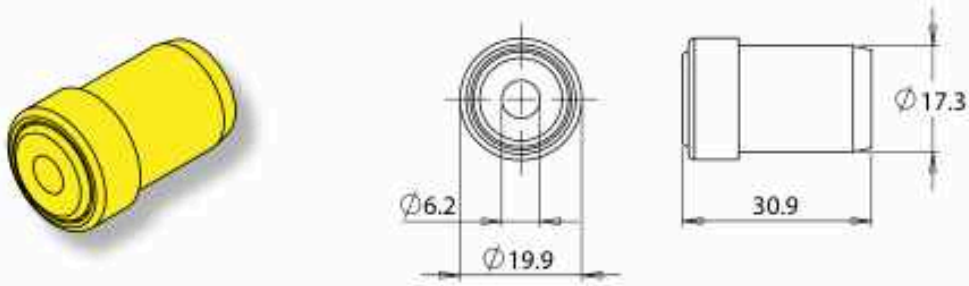

EBU25-22-6

25mm x 22mm End Bearing Unit with a 6mm Bore and Stainless Steel Balls
Finish: Yellow
Bag Qty: 500
Bag Weight: 4kg

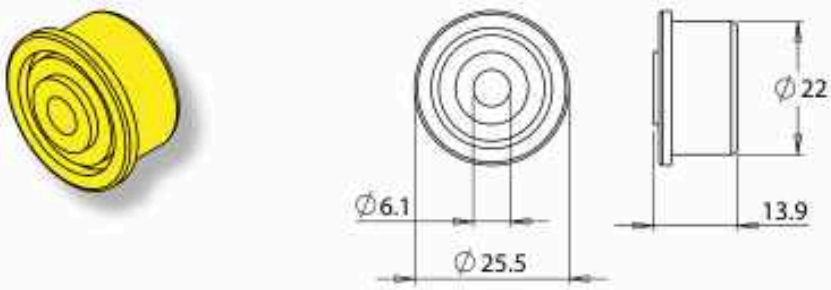

EBU25-22-8

25mm x 22mm End Bearing Unit with an 8mm Bore and Stainless Steel Balls
Finish: Natural Yellow
Bag Qty: 500
Bag Weight: 4kg

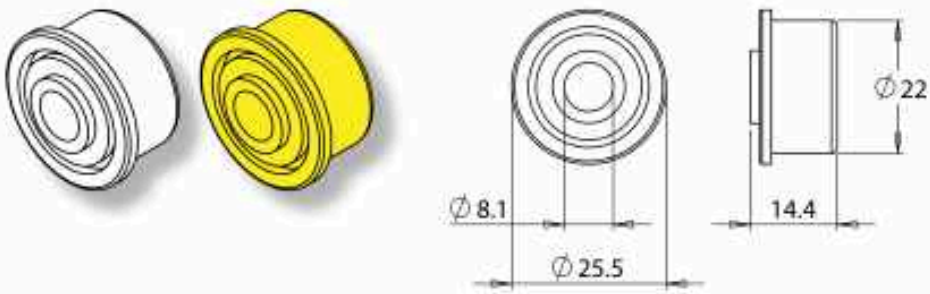

EBU30-26.3-8

30mm x 26.3mm End Bearing Unit with an 8mm Bore and Stainless Steel Balls
Finish: Blue Grey
Bag Qty: 500
Bag Weight: 7kg

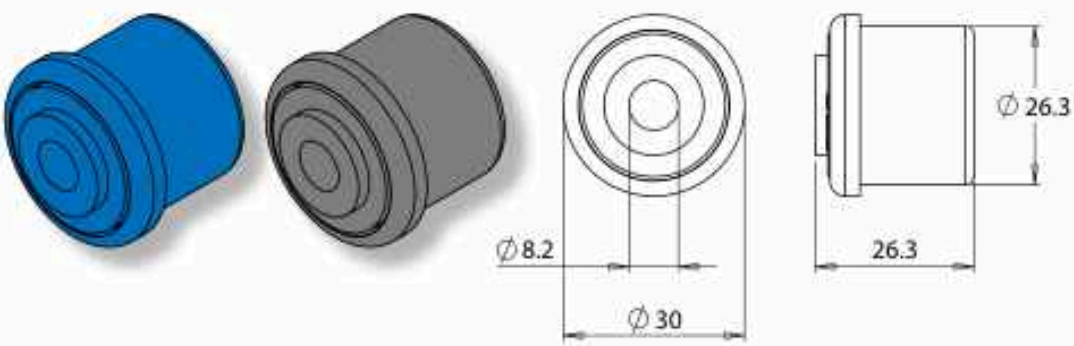

EBU30-26-7

30mm x 26mm End Bearing Unit with a 7mm Bore and Stainless Steel Balls
Finish: Grey
Bag Qty: 500
Bag Weight: 7kg

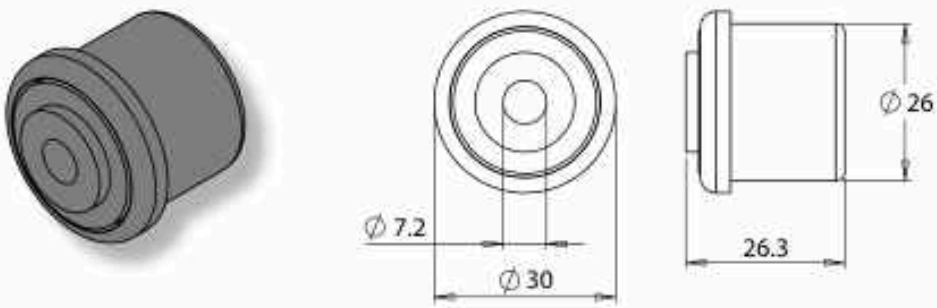

Contents Page
Conveyor Components

Telephone: +44(0)1691 670536
All parts are manufactured to a tolerance of 4 or -0.2mm.
Rollers must be checked to tracks for suitability.

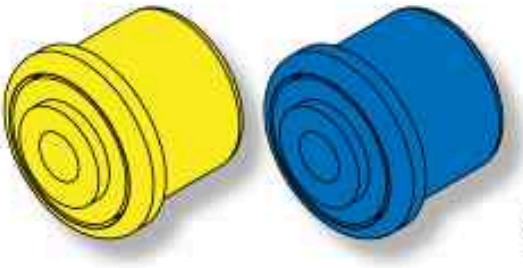

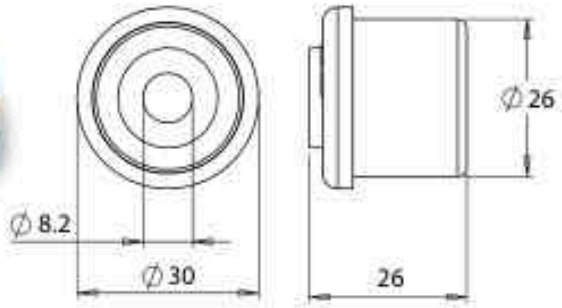

EBU30-26-8

30mm x 26mm End Bearing Unit with an 8mm Bore and Stainless Steel Balls
Finish: Yellow
Blue
Bag Qty: 500
Bag Weight: 7kg

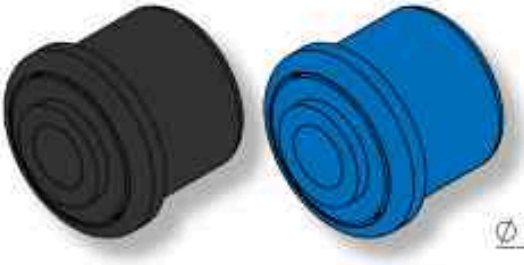

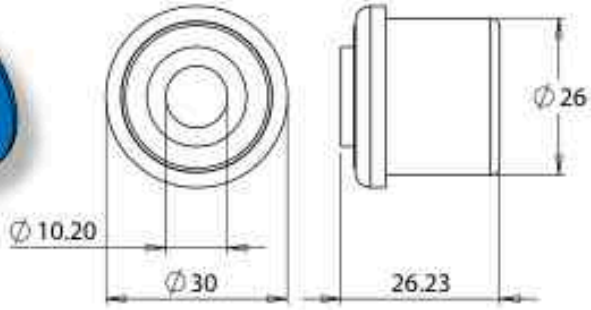

EBU30-26-10

30mm x 26mm End Bearing Unit with a 10mm Bore and Stainless Steel Balls
Finish: Black
Blue
Grey
Yellow
Bag Qty: 500
Bag Weight: 7kg

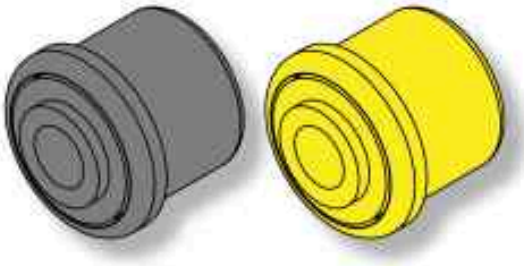



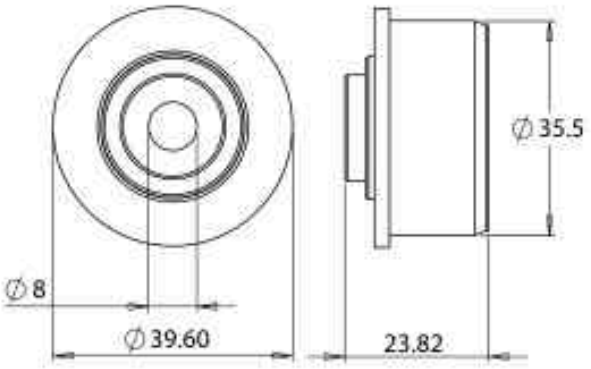

EBU40-35.5-8

40mm x 35.5mm End Bearing Unit with an 8mm Bore and Stainless Steel Balls
Finish: Blue
Bag Qty: 500
Bag Weight: 8kg



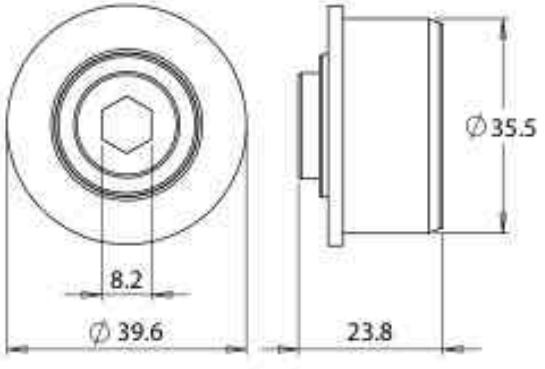

EBU40-35.5-8H

40mm x 35.5mm End Bearing Unit with an 8mm Hex Bore and Stainless Steel Balls
Finish: Blue
Bag Qty: 500
Bag Weight: 8kg

All parts are manufactured to a tolerance of +/- 0.2mm
Rollers must be clinched in tracks for reliability

40 End Bearing Units

EBU40-35.5-10

40mm x 35.5mm End Bearing Unit with a 10mm Bore and Stainless Steel Balls

Finish: Blue
Bag Qty: 500
Bag Weight: 8kg



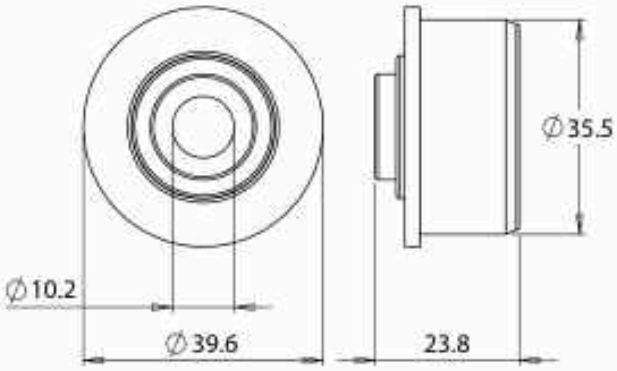

EBU40-35-10

40mm x 35mm End Bearing Unit with a 10mm Bore and Stainless Steel Balls

Finish: Blue
Yellow
Bag Qty: 500
Bag Weight: 8kg





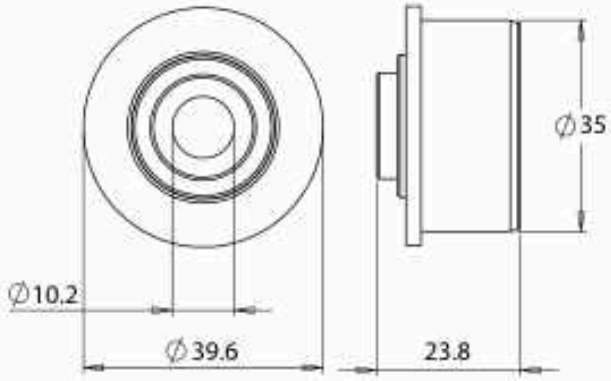







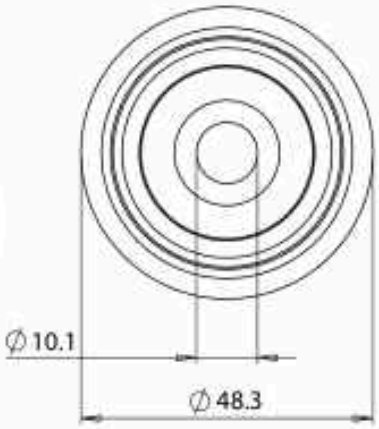

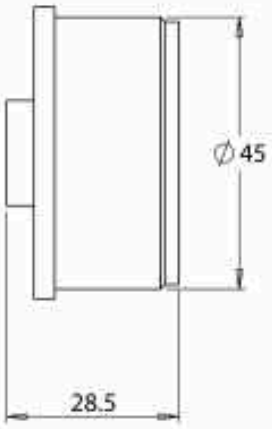

EBU48-45-10

48mm x 45mm End Bearing Unit with a 10mm Bore and Stainless Steel Balls

Finish: Black
Blue
Yellow
Bag Qty: 500
Bag Weight: 8kg

All parts are manufactured to a tolerance of +/- 0.2mm
Rollers must be checked in trucks for suitability

41 End Bearing Housings

End Bearing Housings (EBH) are similar to End Bearing Units (EBU) in how they operate however, the ball bearings contained in EBU's are replaced with either a Carbon Chrome or Stainless Steel Precision Bearing. The outer and inner housings are made from Polypropylene and can be manufactured with a variety of bore sizes.

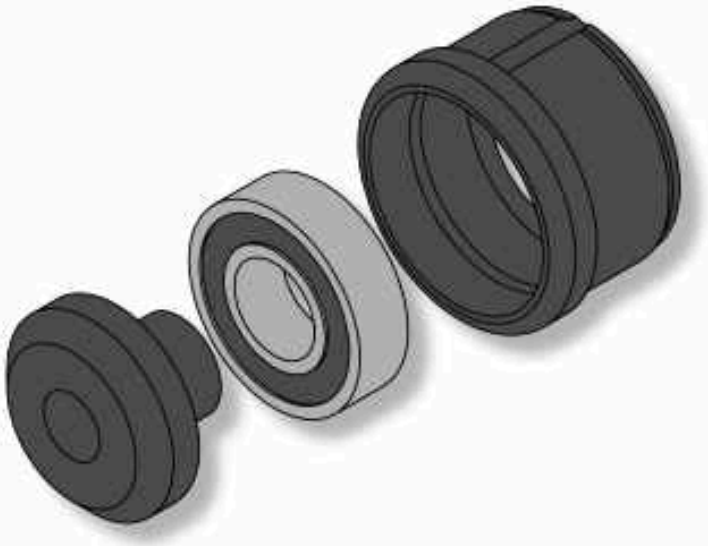

Bore Sizes Available:

CAP8R	8mm Round
CAP10R	10mm Round
CAP12R	12mm Round
CAP14R	14mm Round
CAP11HEX	11mm Hex
CAP12HEX	12mm Hex

EBH40-37

40mm x 37mm DIA End Bearing Housing

Bearing Options:
6002RS Stainless Steel
6002RS Carbon Chrome

Sack Qty: 250
Sack Weight: 8.5kg



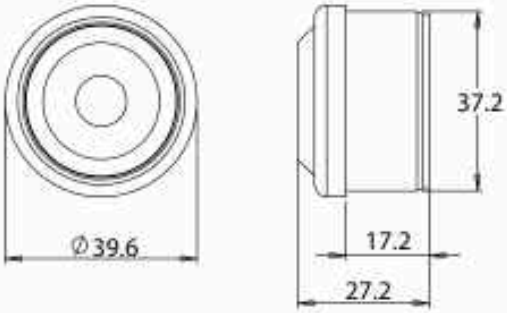

EBH50-45

50mm x 45mm DIA End Bearing Housing

Bearing Options:
6002RS Stainless Steel
6002RS Carbon Chrome

Sack Qty: 250
Sack Weight: 11.4kg



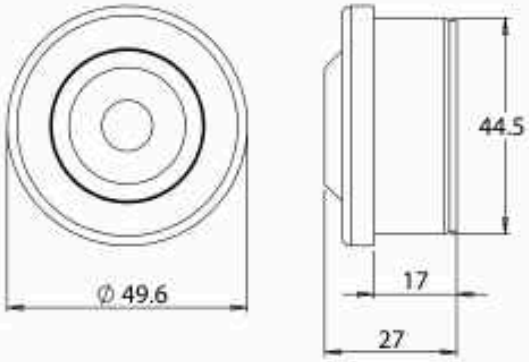

EBH50-47

50mm x 47mm DIA End Bearing Housing

Bearing Options:
6002RS Stainless Steel
6002RS Carbon Chrome

Sack Qty: 250
Sack Weight: 11.4kg



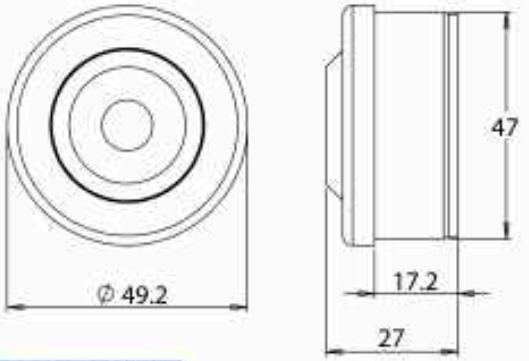

Contents Page
Conveyor Components

Telephone: +44(0)1691 670536

All parts are manufactured to a tolerance of +/- 0.2mm. Riders must be checked by hand for suitability.

End Bearing Bungs 42

End Bearing Bungs (EBB) are different from EBU's and EBH's as they are one complete unit with no moving parts but are designed for the same purpose as their counterparts. They are manufactured entirely from Acetal and can be manufactured with either a 10.3mm Bore or a 10.9mm Bore.

Bore Sizes Available:

10.3mm Round
10.9mm Round



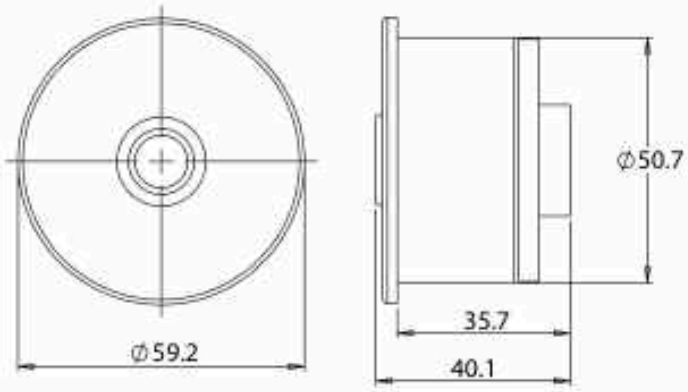

EBB60-51

60mm x 51mm DIA End Bearing Bung

Batches of 500

Sack Qty: 100
Sack Weight: 7kg



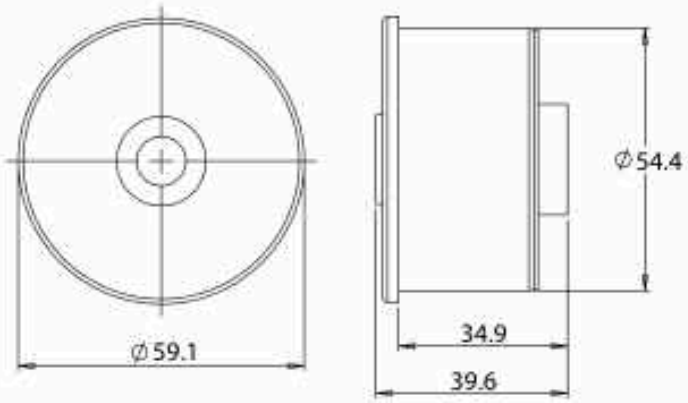

EBB60-54

60mm x 54mm DIA End Bearing Bung

Batches of 500

Sack Qty: 100
Sack Weight: 7kg



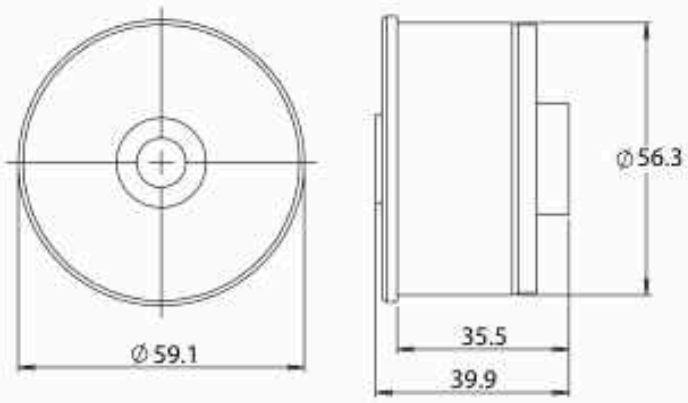

EBB60-56

60mm x 56mm DIA End Bearing Bung

Batches of 500

Sack Qty: 100
Sack Weight: 7kg

All parts are manufactured to a tolerance of +/- 0.2mm
Rollers must be checked in trucks for suitability

43 Skate Wheels

SWBL48-24-8

48mm DIA x 24mm
Skate Wheel with stainless steel balls

Finish: Blue

Bore Size Options:
8.2mm
6.35mm

Sack Qty: 500
Sack Weight: 9.5kg



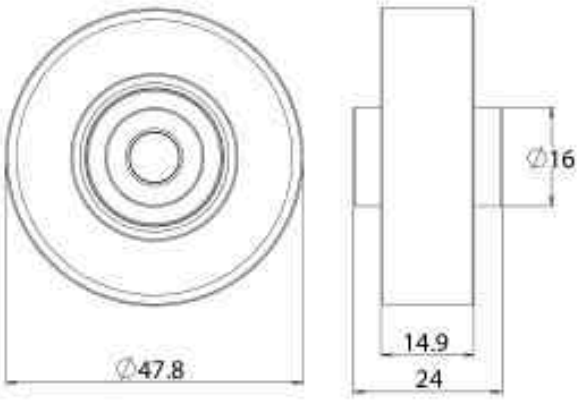

SWRD48-24-8

48mm DIA x 24mm
Skate Wheel with stainless steel balls

Finish: Red

Bore Size Options:
8.2mm
6.35mm

Sack Qty: 500
Sack Weight: 9.5kg

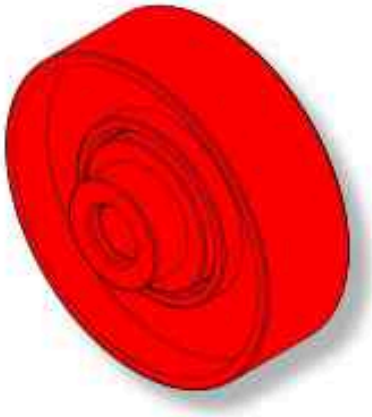

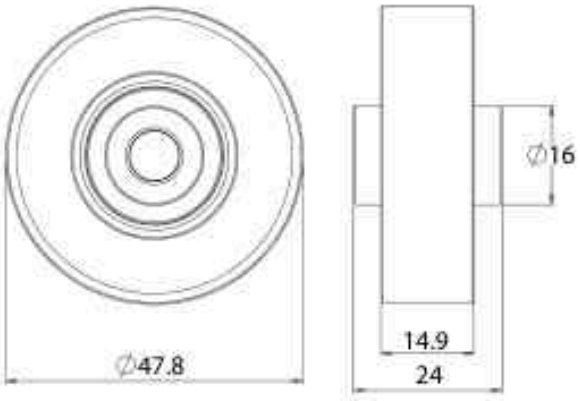

SWBR48-24-8

48mm DIA x 24mm
Skate Wheel with stainless steel balls

Finish: Brown

Bore Size Options:
8.2mm
6.35mm

Sack Qty: 500
Sack Weight: 9.5kg



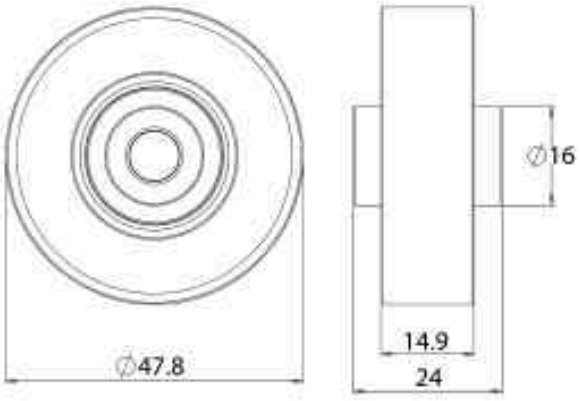

Contents Page
Conveyor Components
64 I CVRollers.com 2014 Catalogue
Telephone: +44(0)1691 670536

Spring Axle Bearing Units 44

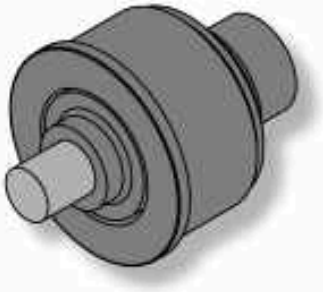

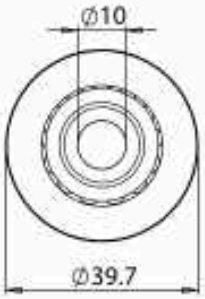

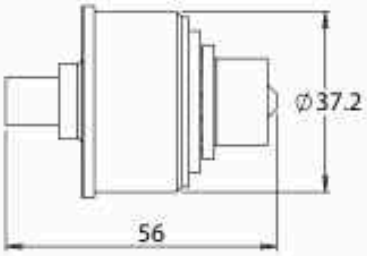

SABU40-37-10

40 x 37mm DIA Spring Assembled Bearing Unit with a 10mm Bore

Finish: Grey

Sack Qty: 250
Sack Weight: 15.4kg

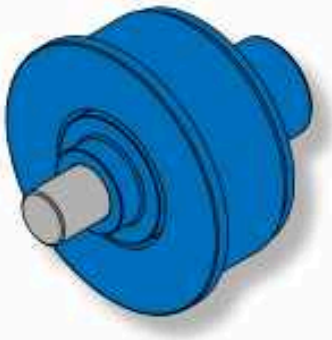

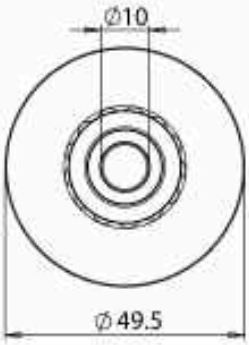

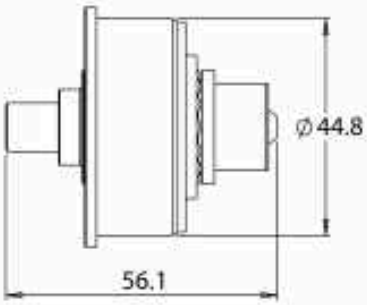

SABU50-45-10

50 x 45mm DIA Spring Assembled Bearing Unit with a 10mm Bore

Finish: Blue

Sack Qty: 250
Sack Weight: 15.3kg

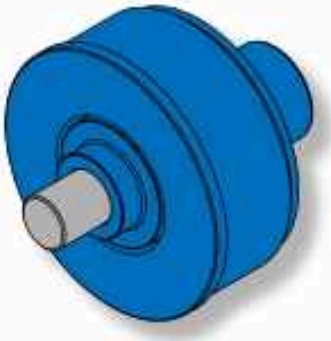

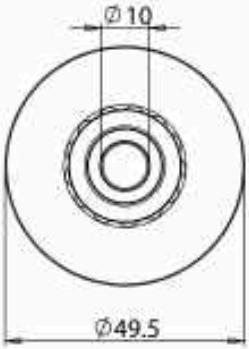

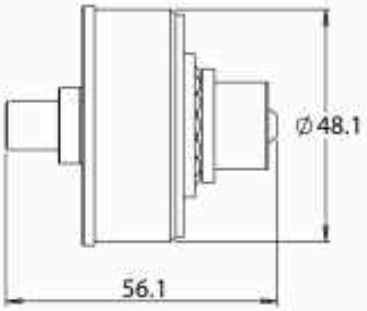

SABU50-47.5-10

50 x 47.5mm DIA Spring Assembled Bearing Unit with a 10mm Bore

Finish: Blue

Sack Qty: 250
Sack Weight: 15.3kg



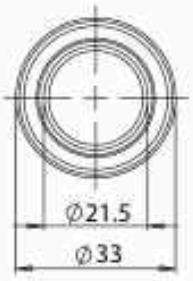



SABU-CAP-01

Standard sized Cap designed to fit all of our Spring Assembled Bearing Units

Finish: Blue

Sack Qty: 500
Sack Weight: 3.6kg

All parts are manufactured to a tolerance of + or - 0.2mm
Rollers must be checked in trucks for suitability

45 Assembled Poultry Chains

Overhead/Poultry Conveyor Tube Type Trolley fully assembled and installed into an Poultry Conveyor Line (Right)

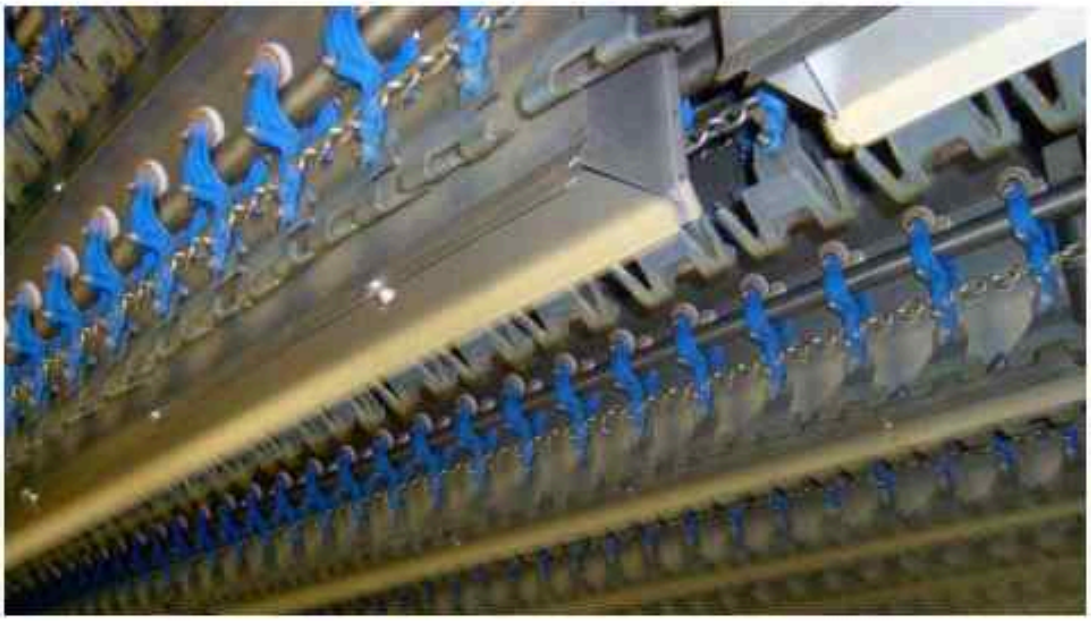

Chain

- Case hardened galvanised construction
- 8 x 25.4mm pitch conveyor chain
- Fully compatible with all poultry chain

Trolley wheels

- Moulded Acetal Homopoymer construction
- 420AISI stainless steel balls
- Available in choice of colours

Trolley straps

- Suitable for TubeTrack and T-Type
- Moulded Acetal Copolymer construction
- Rust and cleaning chemical resistant
- Available in choice of colours

Tube Type Trolley with Standard Wheels

Complete Chain Assembly with Tube Type Trolley Brackets and Standard Wheels

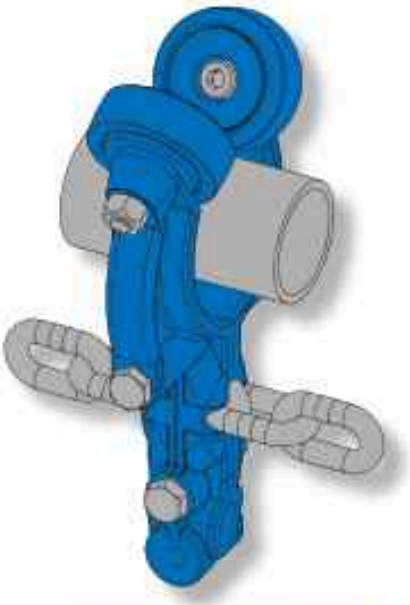

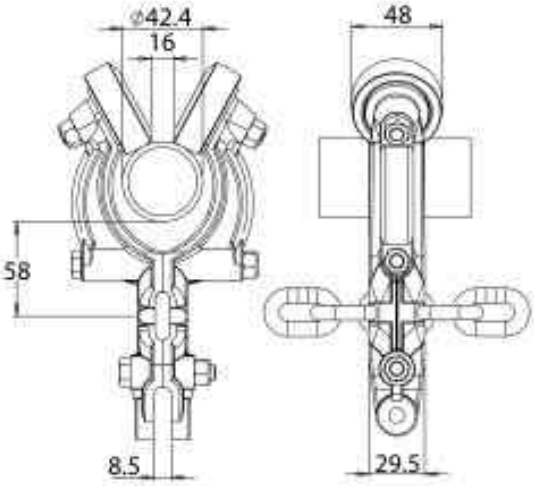

Contents Page
Conveyor Components

Telephone: +44(0)1691 670536

All parts are manufactured to a tolerance of ± or - 0.2mm. Rollers must be checked to ensure for suitability.

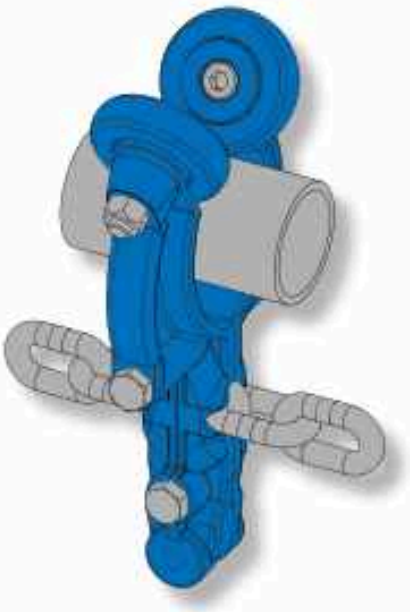

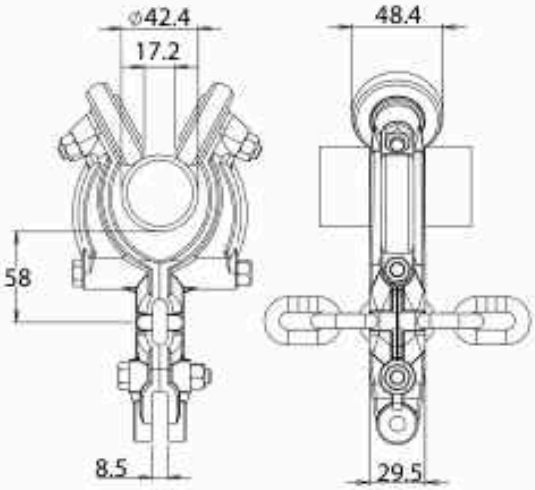

Tube Type Trolley with Slim Wheels

Complete Chain Assembly with Tube Type Trolley Brackets and Slim Wheels

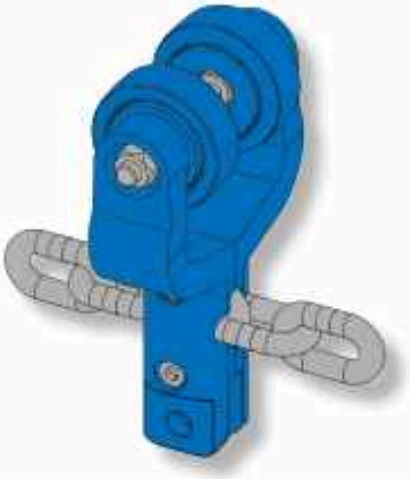

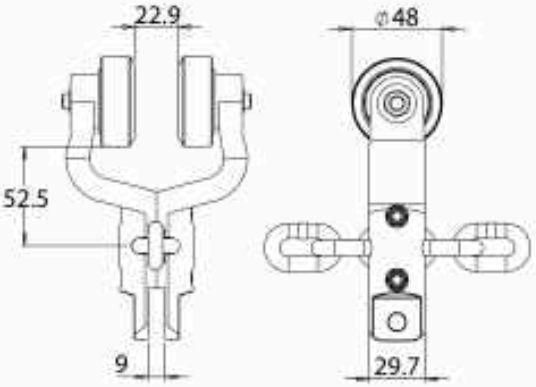

T-Type Trolley with Standard Wheels

Complete Chain Assembly with T-Type Trolley Brackets and Standard Wheels

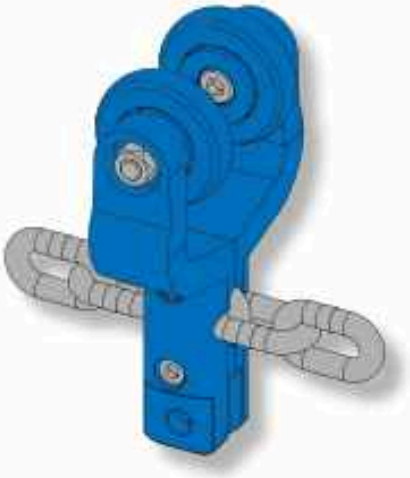

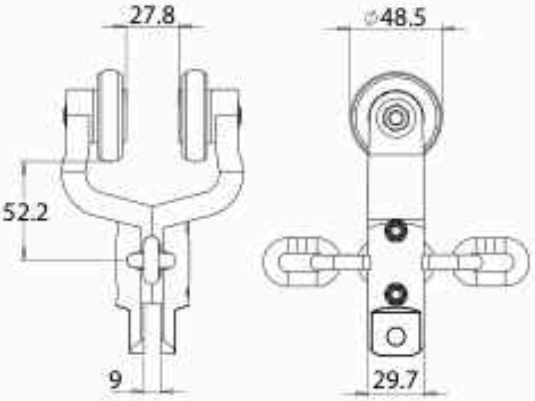

T-Type Trolley with Slim Wheels

Complete Chain Assembly with T-Type Trolley Brackets and Slim Wheels

All parts are manufactured to a tolerance of + or - 0.2mm
Rollers must be checked in stock for suitability

46 Poultry Components

TS1

Standard Tube Type Bracket for use with overhead / Poultry Conveyor

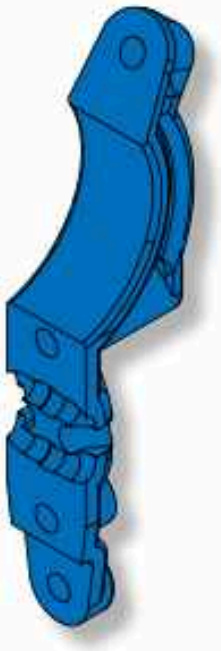

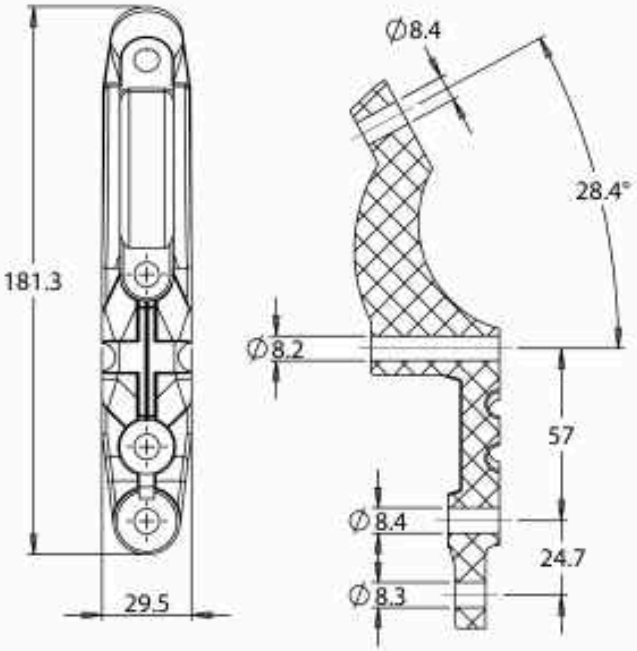

TS2

T- Type Bracket for use with Overhead / Poultry Conveyor

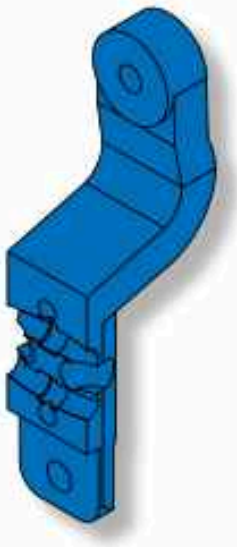

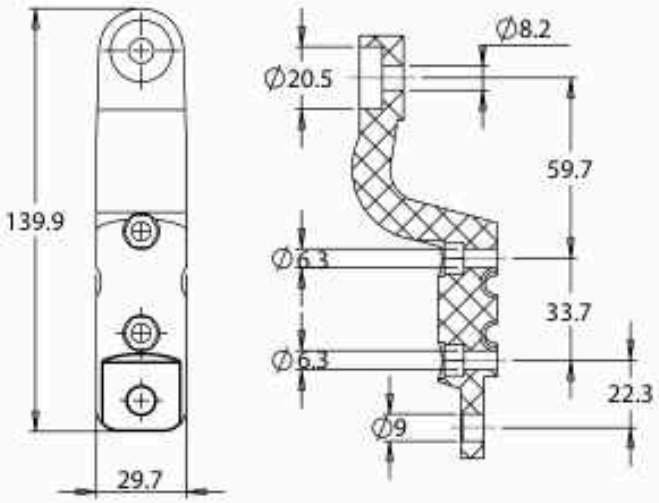

Contents Page
Conveyor Components

Telephone: +44(0)1691 670536

All parts are manufactured to a tolerance of +/- 0.2mm. Rollers must be checked by hand for suitability.



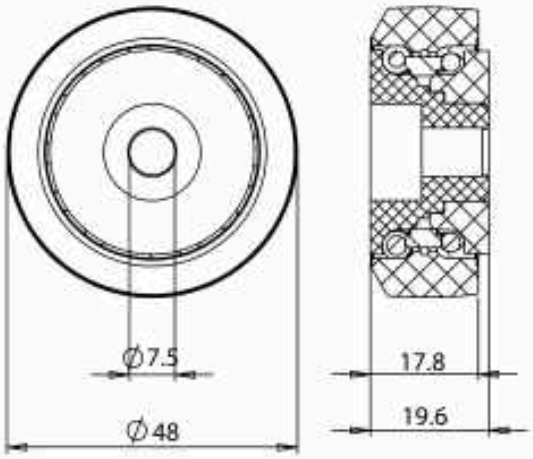

PPW01-01

Standard Poultry Wheel



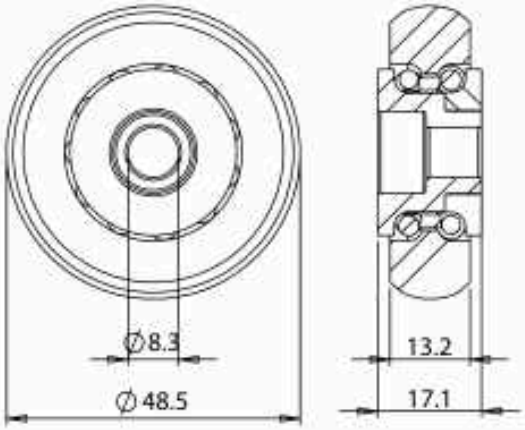

POU48-17-8

Slim Poultry Wheel



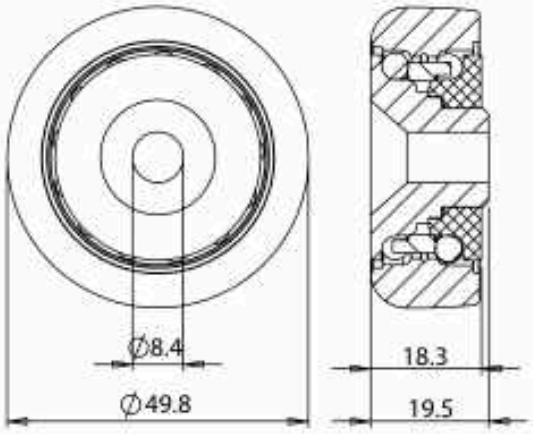

PW01-05

50mm Poultry Wheel

All parts are manufactured to a tolerance of + or - 0.2mm
Rollers must be checked in tracks for suitability

47 Plastic Injection Moulding Capabilities



Moulding Capability

As well as our standard items, we also offer a bespoke in house injection moulding service tailored to suit the needs of the customer. With our in-house tool making workshop and 45 years of experience in design and working with customers we can offer a complete service.

With access to a variety of plastics and colours of only the highest quality materials our standard and bespoke products already include:



- Conveyors
- Lorry Curtainsider Spares
- Slide & Tilt Drawers
- Insert Moulding
- Thrust Bearing Cages
- Pulley Bearings
- Purpose-Made Bearings
- and Associated Assemblies incoporating our very own bearings

Design & Development



With continuous investment in the latest technology and years of experience in Industrial Design we can offer a Design & Development service which will allow you to get the most out of your products or the skills to take your latest product ideas to the next level.

Our in-house tool making workshop and CAD/CAM services allow us to work closely with the Design Engineers and Tool Makers to fine tune our products so that they operate to their maximum potential. We now also have in-house 3D printing facilities for rapid prototyping which allows us to iron out key design features and decisions as quickly as possible without breaking the bank.



Assembly

As well as Designing and Manufacturing the parts for your products we also have the facilities for in-house assembly. Our services include:

- Spin Riveting
- Manual Assembly
- Trimming
- Sewing
- Press Assembly
- Innovative processes and procedures for fast effective assembly.
- Automated Assembly
- Insert Moulding

Contents Page

Telephone: +44(0)1691 670536

All parts are manufactured to a tolerance of +/- 0.2mm. Rollers must be checked by user for suitability.

Looking after our World 48



As a major manufacturer we have a responsibility to leave as small a carbon foot print as possible.

To do this we have under gone changes in our day to day running of our business as well as looking forward to the future in order to lessen our impact on the environment.

Day to day running we recycle our :-

Cardboard.

Paper.

Plastic waste from our moulding machines.

Metals.

Looking forward we have invested in :-

Solar PV system including 164 panels, saving upward of 40,000 kg of Co2 per year.

New energy efficient processing machinery.

More energy efficient premises.

Greener working policies through out the factory.

Working with government bodies for a greener future.

Replacing our old machines with ones that run on 20% of the energy used by the machines previously.

Training staff in-house to be more environmentaly aware as they go about their day to day tasks.



Contents Page

All parts are manufactured to a tolerance of + or - 0.2mm
Rollers must be checked in stocks for suitability

49 Notes

Contents Page

Telephone: +44(0)1691 670536

All parts are manufactured to a tolerance of + or - 0.2mm.
Rollers must be checked in tracks for suitability.

Notes 49

Contents Page

All parts are manufactured to a tolerance of + or - 0.2mm.
Rollers must be checked in tracks for suitability.

49 Notes

Contents Page

Telephone: +44(0)1691 670536

All parts are manufactured to a tolerance of + or - 0.2mm.
Rollers must be checked in tracks for suitability.

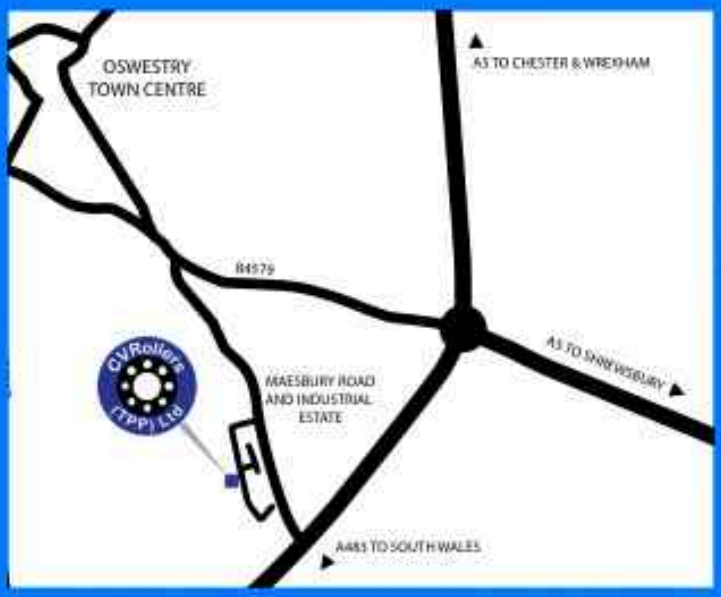

Mile Oak Industrial Estate,
Maesbury Road, Oswestry,
Shropshire, SY10 8GA
Tel: +44(0) 1691 670536
Fax: +44(0) 1691 670538
sales@cvrollers.co.uk

www.cvrollers.com